THE USE OF THE MICROSCOPE

A HANDBOOK FOR ROUTINE AND RESEARCH WORK

BY

JOHN BELLING

Cytologist

Carnegie Institution of Washington

FIRST EDITION

McGRAW-HILL BOOK COMPANY, INC.

NEW YORK: 370 SEVENTH AVENUE

LONDON: 6 & 8 BOUVERIE ST., E. C. 4

1930

McGRAW-HILL PUBLICATIONS IN THE AGRICULTURAL AND BOTANICAL SCIENCES

EDMUND W. SINNOTT, CONSULTING EDITOR

Adams—Farm Management
Babcock and Clausen—Genetics in Relation to Agriculture
Babcock and Collins—Genetics Laboratory Manual
Belling—The Use of the Microscope
Boyle—Marketing of Agricultural Products
Brown—Cotton
Carrier—Beginnings of Agriculture in America
Cruess—Commercial Fruit and Vegetable Products
Cruess and Christie—Laboratory Manual of Fruit and Vegetable Products
Eames and MacDaniels—Plant Anatomy
Eckles, Combs and Macy—Milk and Milk Products
Emerson—Soil Characteristics
Fawcett and Lee—Citrus Diseases
Gardner, Bradford and Hooker—Fruit Production
Gardner, Bradford and Hooker—Orcharding
Gäumann and Dodge—Comparative Morphology of Fungi
Hayes and Garber—Breeding Crop Plants
Heald—Plant Diseases
Horlacher—Sheep Production
Hutcheson and Wolfe—Field Crops
Jones and Rosa—Truck Crop Plants
Loeb—Regeneration
Löhnis and Fred—Agricultural Bacteriology
Lutman—Microbiology
Piper and Morse—The Soybean
Pool—Flowers and Flowering Plants
Rice—The Breeding and Improvement of Farm Animals
Sharp—Cytology
Sinnott—Botany
Sinnott—Laboratory Manual for Elementary Botany
Sinnott and Dunn—Principles of Genetics
Swingle—A Textbook of Systematic Botany
Thatcher—Chemistry of Plant Life
Thompson—Vegetable Crops
Waite—Poultry Science and Practice
Weaver—Root Development of Field Crops
Weaver and Bruner—Root Development of Vegetable Crops
Weaver and Clements—Plant Ecology

McGRAW-HILL PUBLICATIONS IN THE ZOÖLOGICAL SCIENCES

A. FRANKLIN SHULL, CONSULTING EDITOR

Fernald—Applied Entomology
Graham—Principles of Forest Entomology
Haupt—Fundamentals of Biology
Haupt—Laboratory Directions for General Biology
Metcalf and Flint—Destructive and Useful Insects
Mitchell—General Physiology
Pearse—Animal Ecology
Riley and Christenson—Guide to the Study of Animal Parasites
Rogers—Comparative Physiology
Rogers—Laboratory Outlines in Comparative Physiology
Shull—Heredity
Shull, LaRue and Ruthven—Animal Biology
Shull, LaRue and Ruthven—Laboratory Directions in Animal Biology
Snodgrass—Anatomy and Physiology of the Honeybee
Van Cleave—Invertebrate Zoology
Wieman—General Zoölogy

These two series were originally published as one under the title of McGraw-Hill Agricultural and Biological Publications. The late Dr. C. V. Piper was Consulting Editor from the inception of this series in 1917 until his death in 1926.

COPYRIGHT, 1930, BY THE
McGRAW-HILL BOOK COMPANY, INC.

PRINTED IN THE UNITED STATES OF AMERICA

THE MAPLE PRESS COMPANY, YORK, PA.

DEDICATED TO

HANNAH SEWALL BELLING

PREFACE

For scientific work, it is desirable to get in the microscope the sharpest and most "contrasty" images possible with the apparatus at hand. There are several dozen adjustments, or variations of methods, each of which will add slightly to the perfection of the image in the microscope. Alone, each of these slight improvements may not seem worth making; but combined they may cause a decided difference in the brilliancy and crispness of the microscopical image. In this book, the most important of these methods have been brought together from the original papers, and to them have been added the results of the writer's experience gained in years of continuous work with the microscope.

The author desires to thank especially Prof. Dr. H. Siedentopf, of Jena; Dr. H. Hartridge, of Cambridge; and the firms of C. Zeiss, E. Leitz, Watson and Sons, Bausch and Lomb, Spencer Lens Company, and the Eastman Kodak Company; for reprints or catalogues, and other information. Dr. C. W. Metz and Dr. M. Demerec, of the Carnegie Institution of Washington, have also given welcome assistance.

Dr. R. Chambers, of Cornell Medical College, kindly read about half the original chapters and made many useful suggestions, especially as to style. Dr. C. B. Bridges, of Columbia University, also read some of the first part and offered helpful criticisms. Mr. H. N. Ott, of the Spencer Lens Company, was good enough to give advice with regard to the chapter on the Greenough Binocular. The well-known microscopist, Dr. N. A. Cobb, of the U. S. Department of Agriculture, also gave suggestions with regard to several chapters. Mr. L. W. Hoshour, California agent of C. Zeiss, read the original draft and made useful criti-

cisms. Professor C. W. Woodworth, author of "Microscope Theory," kindly consented to read part of the final revision. To each of these, the writer's thanks are due.

Corrections of any of the writer's errors, and new information from users of the microscope, will be thankfully received.

This book was written with the permission and assistance of the Carnegie Institution of Washington.

JOHN BELLING.

CARNEGIE INSTITUTION OF WASHINGTON,
January, 1930.

CONTENTS

PAGE

Preface vii
Introduction 1

CHAPTER I

Use of the Hand Magnifier 14

CHAPTER II

Use of the Compound Microscope 26

CHAPTER III

The Twin-objective Binocular 37

CHAPTER IV

The Monobjective Binocular 46

CHAPTER V

The Monocular Microscope 55

CHAPTER VI

The Routine Microscope 60

CHAPTER VII

Illumination 66

CHAPTER VIII

Light Filters and Screens 75

CHAPTER IX

The Condenser 80

CHAPTER X

The Object 99

PAGE

CHAPTER XI

THE COVER-GLASS PROBLEM 110

CHAPTER XII

THE OBJECTIVE 116

CHAPTER XIII

THE WATER-IMMERSION OBJECTIVE 131

CHAPTER XIV

MIRROR, STAGE, NOSEPIECE, AND DRAWTUBE 137

CHAPTER XV

THE EYEPIECE 147

CHAPTER XVI

MICROSCOPE OUTFITS 154

CHAPTER XVII

DRAWING 161

CHAPTER XVIII

PHOTOGRAPHY 165

CHAPTER XIX

TESTING THE MICROSCOPE 171

CHAPTER XX

CARE OF THE MICROSCOPE 175

CHAPTER XXI

RULES FOR HIGH-POWER AND ROUTINE MICROSCOPY 186

CHAPTER XXII

THE PAST AND FUTURE OF THE MICROSCOPE 196

CHAPTER XXIII

LITERATURE OF THE MICROSCOPE 209

PAGE

CHAPTER XXIV

DISCOVERIES WITH THE MICROSCOPE 214

CHAPTER XXV

A HUNDRED MICROSCOPICAL OBJECTS OF BIOLOGICAL INTEREST 218

CHAPTER XXVI

FIXING AND STAINING MICROSCOPIC OBJECTS 241

CHAPTER XXVII

FIFTY PRACTICAL EXERCISES WITH THE MICROSCOPE 247

QUESTIONS 269
MICROSCOPICAL GLOSSARY 277
REFERENCES TO THE LITERATURE OF THE MICROSCOPE . . . 292
INDEX 303

THE USE OF THE MICROSCOPE

INTRODUCTION[1]

MICROSCOPICAL TRAINING

Accumulation of Errors.—It is certain that there are several dozen forms of error, each of which may entail a loss of perhaps 5 per cent or more in the fineness of detail (amount of resolution) or in the sharpness (definition) of the microscopical image. If the microscopist follows the rules only when the defects from not following them are obvious to him, the image which he sees will doubtless have several unnoticed defects, each causing perhaps up to 5 per cent of loss, and these defects may be due to any of 50 or more causes. Such defects, in some cases, may total up to even 50 per cent of loss in useful magnification. Therefore one should not drive ahead blindly, but either follow the rules closely or take time to test the effects of any slight departure from them with appropriate test objects. Since much time may be used up in this testing procedure, the writer considers it pays best to obey strictly the laws of optics. This presupposes a knowledge of the rules of scientific microscopy.

Sequence of Study.—If one proceeds to the use of magnifications of 100 or more without preliminary work with lenses magnifying 2 to 50 times, the connection with the unmagnified world is slender, the microscopical images of

[1] This introduction has been planned so that one who has not time to study the whole book may find much that he needs here. Other readers may perhaps postpone the latter part of the introduction till they have read most of the book.

100 to 1,000 magnification remaining more or less isolated from daily life. The twin-objective (Greenough) binocular will supply such low-power pictures, giving an image to both eyes in relief. Training in the use of the microscope should be, it seems, a series of steps from the known to the unknown: from the magnification of 1.0 of the eye focused (accommodated) for reading at 10 inches, to the maximum useful magnification of the best oil-immersion objectives; which may, with all adjustments correct, reach nearly 1,400.

Stages in Microscopical Training.—In the use of the medium or high-power compound microscope in scientific work (apart from such an obvious requirement as the automatic movement of the slide in the opposite direction to the required movement of the image), there are certain procedures which must be learned in order to obtain a perfect microscopical image. They include the following points:

The constant employment of the fine motion of the microscope is necessary with medium or high powers. This uses the upward and downward movement of the focus plane as a substitute for the accommodation of the eye for different depths. The constant employment of the fine motion has been sometimes said to mark the experienced microscopist. But it is, in fact, only the *A* of microscopy, with the rest of the alphabet to follow.

A second important step in practical microscopy is the solving of the cover-glass problem. It includes the learning of the star test. (This will be discussed in a subsequent chapter.) The simplest solution is probably the best.

The constant adjustment of the iris diaphragm of the focused condenser (immersed if necessary) to get the right aperture in the condenser for each objective and object, is required in order to procure the clearest images and those showing most detail. The aim should be a condenser cone nine-tenths of the aperture of the objective, without glare. The knob which moves the condenser iris should be worn shiny by incessant use.

Since, with an uncorrected and unadjusted condenser, glare prevents the attainment of a $\frac{9}{10}$ aperture, an important step in microscopy is the adjusting of the aspheric or achromatic condenser for the distance of the lamp, and the thickness of the slide, combined with the constant use of the condenser with water immersion for high powers. This includes the learning of the ring test.

A fifth step in microscopical training is the correct use of light screens and light filters. When the iris of the condenser is put at the right aperture, the light may be too intense. In this case, a neutral screen or a colored light filter must be interposed. A set of yellow-green light filters, for reasons to be subsequently given, provides the best screen in many cases. Without some such regulation of the intensity of the light for different objectives, a $\frac{9}{10}$ condenser cone cannot usually be obtained. Without yellow-green screens, one of the great aids to microscopy is absent.

For high powers especially, it is demonstrable that there is a light haze or glare over the object, when the aperture of the condenser approaches that of the objective, and every other adjustment is correct. This glare clears away on sufficiently contracting the image of the source of light on the slide by a circular diaphragm close to the source. A 3-millimeter diaphragm is usually suitable for the highest useful magnifications, with a lamp distance of about 25 centimeters. Training in the correct use of such a diaphragm is apparently essential for the production of the best microscopical images.

Since a water-immersion objective can give better images of objects at depths of more than a few microns below water than an oil-immersion objective of similar aperture, the microscopist who is concerned with biology will, with advantage, train himself in the use of the correction collar of a water-immersion objective, in order to get the best images in watery media.

Objects near or below $\frac{1}{5}$ micron across, which cannot readily be differentially stained, are often well seen in a

dark field. Hence training in the use of dark-field condensers of the highest aperture is essential for obtaining the best images of submicroscopic or nearly submicroscopic objects.

Thus without the correct use of each of these aids: fine motion, correction for cover-glass, condenser iris, adjustment of corrected and immersed condenser, light screens or yellow-green light filters, diaphragm on source of light, water-immersion objective, and dark field, the optimum of vision through the microscope cannot be regularly attained.

Use of the Microscope.—1. When the rules are nearly all unknown or disregarded, the microscope is put before the window or lamp, and the mirror turned till the light is seen through the eyepiece. The slide is then put on the stage and focused. If the light is too bright, it is cut down by the iris of the uncorrected condenser, or by lowering the condenser. The concave mirror may also be tried with the high powers, when the light is too dim. The cover-glass may vary from 0.08 to 0.24 millimeter, or more.

2. When all, or nearly all, of the rules are regarded, the procedure differs according as the object is in a watery fluid (of refractive index about 1.33), or in immersion oil or balsam (of refractive index about 1.52). Suppose one has to examine (*a*) a smear preparation of the pachytene chromosomes of a plant, mounted in iron-acetocarmine (of refractive index slightly over 1.33); and (*b*) a similar preparation stained with iron-brazilin and mounted in immersion oil. In both cases, the slides will have been chosen as 1 millimeter thick, and the covers as 0.16 to 0.17 millimeter. (*a*) The microscope is centered with the lamp, and placed at the known right distance from it. (*b*) A properly treated double-ground glass disc has been placed close before the appropriate electric lamp. (*c*) A chosen yellow-green screen is put close before the reflecting prism. (*d*) The microscope is duly slanted, and the reflecting prism turned to light up the field of the 10 objec-

tive. (*e*) The cover-glass on the slide is measured with the graduated fine motion. (*f*) The upper surface of the cover is freed from grease. (*g*) Water is run between the slide and the condenser. (*h*) The 10 objective is focused on the object, as is also the condenser. (*i*) The iris of the condenser is arranged to give about a nine-tenths cone, or less, for this objective. (*j*) When a cell is found for examination by the high power, the 3-millimeter diaphragm is placed close to the ground glass, and centered by the prism. (*k*) The water-immersion objective 70 is turned on, and the condenser opened to give a $^9/_{10}$ cone, or less, for this objective, after refocusing. (*l*) The correction collar is first set for the known thickness of the cover, and variations tried each way. (*m*) If there is too intense a light, a denser green glass is inserted in the holder. Critical observations can now be made. If the preparation is mounted in immersion oil (or balsam), *f* and *l* are omitted, since an oil-immersion objective is to be employed.

The effects of disregarding all the rules, and of attending to all of them, are given in the following two columns.

Rules Nearly All Disregarded	Rules Nearly All Attended To
1. The 5-times eyepiece gives the best images and is mostly used.	The 15- (or 20-) times eyepiece gives the best images, and is usually employed.
2. The high dry objective gives hazy or foggy images.	The high dry objective gives sharp, bright images.
3. Glare prevents any approach to a $^9/_{10}$ condenser cone.	A $^9/_{10}$ cone is constantly employed on stained objects.
4. The $^1/_{12}$ oil-immersion objective (of 1.3 aperture) will have a maximum useful magnification (without glare) of about 800.	The $^1/_{12}$ oil-immersion objective (of 1.3 aperture) will have a maximum useful magnification (without glare) of about 1,250.
5. The smallest separable distance is about 0.33 micron, with a 3-millimeter source, for the $^1/_{12}$ objective, without special methods being used, such as oblique light.	The smallest separable distance is near 0.22 micron, with a 3-millimeter source, for the $^1/_{12}$ objective.
6. The high-power objectives do not get enough light.	The highest objective is as well illuminated as the lowest.
7. The field of view shows curvature, because of the low eyepiece.	The field of view is nearly flat, because of the high eyepiece.

Rules Nearly All Disregarded	Rules Nearly All Attended To
8. High-power photographs are poor.	Excellent high-power photographs of flat objects can be made.
9. Objects have to be stained deeply to show up in the glare.	Feebler staining can be used, so as to be more or less transparent.
10. Balsam mounting is usually essential for clear images.	Watery fluids, as well as balsam, may be used for mounting.
11. Out-of-center objectives may spoil images.	Accurate centering of high objectives ensures optimum images.

Most workers find themselves between these two extremes. There is no reason why every microscopist should not closely approach the optimum, if time for the necessary amount of extra care can be afforded.

Causes of Injury to the Microscopical Image.—A list of some of the errors causing deterioration of the image in the microscope is given below. The apparently simple matter of soiled surfaces of lenses is included, because experience has shown that incessant vigilance alone can secure some approach to optically clean lens surfaces on a microscope in constant use. In this list, the items regarded as especially deserving the attention of the microscopist (even the routine worker) are in italic type. (Some of the other items are to be recommended only for particularly accurate work, and these are put in square brackets.)

Causes of Injury

Cause	Injury	Preventive
1. *Source of light too bright.*	Dazzling.	Neutral screen, or yellow-green light filter.
2. *Source of light too weak.*	Visual acuity diminished.	Lamp of higher wattage, or better corrected or better centered condenser.
3. Source of light too small.	Margin of field dark.	Large enough disc of double-ground glass near lamp.
4. *Source of light too large.*	Glare from illumination outside field.	Small enough diaphragm close to light.
5. Source of light not circular.	Inequality in different azimuths.	Circular diaphragm on source.
6. Source of light too near or too distant.	Under or over spherical correction of condenser, reducing aperture.	Put lamp at estimated distance. Use ring test.

Causes of Injury.—(Continued)

Cause	Injury	Preventive
7. *Light not best color.*	Does not improve corrections of lenses; or does not show true colors.	Use yellow-green screen for the first; and daylight glass for the second.
8. Double source of light (direct light from lamp plus light diffracted from ground glass).	The source which is unfocused produces glare.	Make ground glass opaque enough to exclude direct light.
9. Source of light out of center line.	Obliquity of image of source, especially injurious with dark field.	Put source of light in center front.
10. *Near source of light used with condenser corrected for parallel rays.*	Spherical and chromatic aberrations, causing loss of aperture.	Use achromatic accessory lens with condenser corrected for parallel rays.
11. Multiple image of source from mirror, with small diaphragm.	Causing difficulty in focusing, and some glare.	Use reflecting prism, silvered if necessary.
12. Mirror (or reflecting prism) out of optic axis.	Obliquity of illumination, especially injurious with dark field. Also, often, loss of aperture.	Fix mirror or prism central.
13. *Condenser not corrected for spherical aberrations.*	Glare, and loss of aperture.	Use aspheric or achromatic condenser.
14. Condenser aspheric, but with all chromatic aberrations.	Glare, and lessened aperture.	Use fairly deep yellow-green light filter, such as No. 58 of the Wratten screens.
15. *Condenser out of focus.*	Glare, and loss of aperture.	Focus condenser on object.
16. *Condenser not centered in optic axis.*	Obliquity of illumination, especially injurious with dark field. Also causes loss of light.	Should be centered by maker, or centering device provided.
17. Top lens of dry or water-immersion condenser soiled with immersion oil.	Loss of light, and some glare. Water will not cling.	Clean with xylol.

CAUSES OF INJURY.—(Continued)

Cause	Injury	Preventive
18. *Iris of condenser open too much.*	Light-flood (bright field plus dark field).	Restrict condenser aperture to less than aperture of objective.
19. *Iris of condenser not open enough.*	Loss of aperture. A $^{9}/_{10}$ cone should be aimed at, if possible.	Open as widely as glare will allow.
20. *Immersion condenser not immersed.*	Loss of aperture, and loss of light. Spherical errors.	Immerse in water, or cedar oil.
21. *Slide too thick, with dry or water-immersion condenser.*	Overcorrected spherical errors of condenser, with loss of aperture.	Use slides 1 millimeter thick; or put lamp closer.
22. Slide too thin, with dry or water-immersion condenser.	Undercorrected spherical errors of condenser, with loss of aperture.	Use slides 1 millimeter thick; or put lamp farther off; or immerse with xylol instead of water.
23. Object in water, or watery medium.	Fogged images with oil-immersion objectives, except close to cover-glass.	Use water-immersion objective, with correction collar.
24. Object mounted dry on the slide, under cover-glass.	Fogged images with oil or water-immersion objectives.	Use dry objective, and sometimes dark field.
25. Objects in media of refraction over 1.52, such as hyrax.	Errors with oil-immersion objectives, if a few microns below the cover.	Mount only on cover-glass.
[26. Objects in media other than air, water, and immersion oil, respectively.	Spherical and chromatic errors, increasing with thickness of medium.	Mount only in these three media; or partly correct by altering tube length.]
27. Object and medium close in refractive power.	Little diffraction, and consequently poor visibility.	Use annular illumination, or dark field.
28. Objects lightly stained, or naturally feebly colored.	Low visibility with large aperture.	Use appropriate complementary color screens, or dark field.
29. Cover-glass not optically clean on under side.	Fog, worst with dark field.	Optical cleanliness of covers.
30. *Cover-glass too thick; over 0.17 milli-*	Spherical overcorrection of dry and	Use measured covers, 0.17 millimeter thick,

Causes of Injury.—(Continued)

Cause	Injury	Preventive
meter.	water-immersion objectives (and to a less extent of oil immersions).	or slightly less, not more.
31. *Cover-glass too thin.*	Spherical undercorrection. (This applies also to oil-immersion objectives.)	Use measured covers, 0.17 millimeter thick (or no covers and special objective), or lengthen tube sufficiently, or use objective with correction collar.
32. *Immersion oil smeared on cover-glass.*	Refractive errors with dry searcher objective.	Use lowest oil-immersion objective as a searcher; or clean cover every time.
33. Wrong immersion oil.	Injury to corrections of objective.	Use maker's oil. Especially avoid thick paraffin oil.
34. Bubbles in immersion oil.	Loss of light, and loss of aperture.	Put immersion oil on front lens.
35. Bubbles with water-immersion objective with concave front.	Loss of light, and loss of aperture.	Put water both on front lens and on cover.
36. *Front lens of dry objective soiled.*	Fog, more or less dense.	Examine regularly with a magnifier.
37. Front lens of a water-immersion objective greasy.	Fog, more or less dense.	Clean regularly with xylol.
38. Cemented lens components separating.	Permanent fog.	Avoid dropping objectives.
39. Bubbles in balsam between component lenses.	Permanent fog.	Avoid heating of objectives, by proximity to lamp.
40. Film on lens surfaces inside objective, or fungi growing on exposed surfaces.	Permanent fog.	Keep unused objectives in dessicator, especially in tropical climates.
41. Cloud of fine bubbles or flakes in cement between lens components.	Permanent fog.	Return to maker, for lenses to be recemented.

Causes of Injury.—(Continued)

Cause	Injury	Preventive
42. Particles on screw shoulders of separable objectives.	Errors of centering, mainly.	Avoid unscrewing, or clean the contacts.
43. *Dust or film on back of objective.*	Loss of light (dust), or fog (film).	Blow off dust, and remove film with lens paper moistened with distilled water.
44. *Objective in wrong place on revolving nosepiece.*	More or less out of center, causing injury to image.	Screw in place marked by maker.
45. *Objectives not centered on nosepiece.*	One of the worst sources of bad images and loss of light.	It is best to return to the maker for repair as soon as possible.
46. Nosepiece with backlash.	One of the worst sources of bad images and loss of light.	Rotate nosepiece in the correct direction.
47. Inside of draw tube without diaphragm.	Glare.	Insert a 14-millimeter diaphragm below eyepiece.
48. *Tube length not* 160 (*or* 170) *millimeters.*	Spherical and other aberrations. A frequent source of bad images with high powers.	Measure exact tube length from shoulder of objective to rim of drawtube.
49. Wrong Huyghenian eyepiece.	Slight aberrations.	Use parfocal eyepieces made by maker of objective.
50. Wrong compensating eyepiece.	Chromatic errors, or wrong tube length.	Use parfocal eyepieces made by maker of objective.
51. *Smeared upper lens of eyepiece.*	Fog.	Examine often with magnifier.
52. Scratched upper lens of eyepiece.	Some loss of light, and diffraction.	Cover instrument to keep off dust.
53. Film on interior surfaces in eyepiece.	Fog.	Clean, and keep in dessicator when out of use.
54. Cemented components of some eyelenses separating.	Fog.	Avoid dropping eyepieces.
55. Too low eyepiece (too low magnification).	Waste of aperture. Too large exit pupil. Curved field.	Use lower objective, and higher eyepiece.
56. *Too high eyepiece* (*too high magnification*).	Empty enlargement. Too small exit pupil. Soft images.	Use higher objective, and lower eyepiece.

Causes of Injury.—(Continued)

Cause	Injury	Preventive
57. Eyes not accommodated for distance.	Slightly wrong position of image in eyepiece.	Use distance spectacles.
58. *Eyes with astigmatism.*	Final image weak in some azimuth.	Use correcting glasses.
59. Extraneous light in observing eye or eyes.	Glare.	Put shield in front of eyepieces.
60. *Unutilized eye at the monocular causing disturbance.*	Accommodating, converging and contracting troubles.	Translucent screen before unutilized eye.
61. *Soiled spectacle glasses.*	Fog.	Keep spectacles optically clean, as part of the microscope.
62. Spectacle glasses not at right angles to the optic axis.	Injuries to best definition.	Incline microscope appropriately.

SOME RULES FOR OPTIMUM HIGH-POWER MICROSCOPY

Apparatus

1. Have, as radiant for bright field, a glass plate finely ground on both sides, together with a powerful enough electric lamp (Hartridge). Focus the incandescent tungsten ribbon for dark field.

2. With high-power objectives, put a 3-millimeter diaphragm close to the ground glass (Beck). This cuts off glare.

3. Adjust lamp distance to suit corrections of condenser (Ainslie, Hartridge), using the ring test. This adjustment is important.

4. Use (neutral screens, or) yellow-green light filters, to moderate the illumination (Barnard), and improve the definition (Spitta).

5. Employ a (silvered) reflecting prism, instead of a glass mirror (Dallinger).

6. Center a suitable correcting achromatic lens immediately below the condenser (Hartridge), if the condenser is made for parallel rays.

7. Have a corrected achromatic condenser of nearly 1.3 true aperture, and use it water immersed (Nelson, Hartridge).

8. Keep slides to 1 millimeter thickness, within 0.1 millimeter (Hartridge). Such slides are readily procurable.

9. Mount objects in immersion oil (Gelei, Metzner).

10. Have cover-glasses of 0.16 to 0.17 millimeter (with all important objects). Use a screw gage to measure them.

11. Center lamp, ground glass, reflecting prism, accessory lens, iris, lenses of condenser, and especially high-power objectives and eyepieces, in the optic axis; and keep them centered.

12. Have a binocular which allows of correct tube length being employed (Siedentopf). Use the star test for this.

13. Keep the magnification at, or not too far below, 1,000 times the *working* aperture (Abbe).

Working

1. Put distilled water between the slide and the condenser.

2. Roughly focus the low-power objective on the slide.

3. Focus and center the image of the ground glass on the slide.

4. Put a suitable (yellow-green) screen before the reflecting prism.

5. Focus the object accurately, after putting it in the small disc of light on the slide (seen from outside the microscope).

6. Cut down the aperture of the condenser to a $\frac{9}{10}$ cone or less. Observe this by a 10-times magnifying lens held over the eyepoint.

7. Search the slide with a low-power objective.

8. Put a 3-millimeter diaphragm on the source. Focus its image on the selected part of the object, and center it.

9. Change to the oil-immersion objective, and oil both the slide and the objective.

10. Turn down the microscope tube till the oil drops fuse. Raise the objective slightly. Then focus down on the image of the small diaphragm.

11. Put the condenser iris to a $\frac{9}{10}$ cone or less.

12. Accurately focus the image of the diaphragm, and accurately center it. Then high-power observation may begin.

(If the cover-glass thickness is not 0.17 millimeter, it should have been measured with the micrometer screw, and the tube length appropriately adjusted, even with oil-immersion objectives.)

Summary.—By not disregarding the optical rules which govern the use of the microscope in scientific work, the

danger is avoided of accumulating errors which will injure the image to an intolerable degree. When there is time and opportunity, it seems advisable that the user of the microscope should start with the lowest magnifications, and proceed slowly through low and medium, before reaching the high ones. Certain points have to be considered in the training of the microscopist. Among these may be the following: automatic movement of the slide in the right direction; incessant use of the fine motion; solving the cover-glass problem; learning the star test; movement of the iris of the condenser only to regulate the aperture; adjusting the condenser to the lamp distance; learning the ring test; constant use of light screens or yellow-green light filters; use of small diaphragms on the source of light; employment of the water-immersion objective with a correction collar; and the use of dark-field condensers of the highest aperture. A list of 62 causes of image injury which have attracted the writer's attention, in using the monocular microscope, is also given. Rules for optimum high-power microscopy are added.

CHAPTER I

USE OF THE HAND MAGNIFIER

Corrected Lenses.—Corrected hand magnifiers (Figs. 1 and 2) are made normally of either two or three simple component lenses cemented together by a transparent resin. They are composed of two different kinds of glass, and the components are of opposite shapes, being convergent or divergent in their action on plane light waves. Such a cemented combination will be called here, following

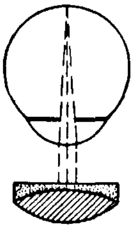

FIG. 1.

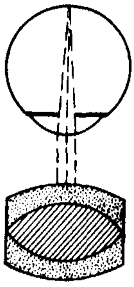

FIG. 2.

FIG. 1. Diagrammatic section of eye with low-power corrected magnifying lens. This figure shows how the aperture of the pencil or cone of light from any point of the object (in this case, the center) is bounded by the iris of the eye. The flat side of the lens is next the eye. (Flint glass is dotted, crown glass cross-lined.)

FIG. 2.—Diagrammatic section of the eye with a low-power triplet magnifier. Cone of light from center point of object.

good authority, a doublet or triplet. (The old use of the term "doublet" or "triplet" for two or three uncorrected lenses placed near together will not be followed here, since such arrangements have ceased to be employed for most scientific purposes.) Such a combination may be calculated (by choosing the refractive indices of the glasses and varying the radii of curvature) to correct the lens more or less perfectly, not only for the chromatic errors inseparable from all refraction of white light; but also, which is at

least equally important, for the errors due to the spherical shape of the surfaces. Thus, though such lenses are simply called achromatic, the spherical aberrations are also much lessened, especially when the lens is held in its calculated position, close to the eye. Some large lenses, in reading glasses and microscope condensers, are now corrected for spherical aberration by grinding them to empirical aspheric curves (making them aplanatic); but this method has apparently not yet been so successful with small lenses.

In most cases, corrected lenses can be identified by noticing the junction of the cemented components at the edge of the lens; or by observing the feeble image of a light reflected from the cemented surface, as compared with the bright images reflected from the air-glass and glass-air surfaces.

An uncorrected magnifying lens is made from a single piece of glass, or from two lenses of the same glass spaced apart; and its use, whether as a simple magnifier, Coddington lens, or uncorrected doublet, is nearly a hundred years out of date. The image given by such a lens has nearly all possible faults, as can be seen by comparing its performance on a page of fine print with that of a corrected doublet or triplet of the same magnification.

Compensating the Unoccupied Eye.—In these single magnifiers, one eye is of course unoccupied. The following is quoted from a note by the writer on "Compensating the Unoccupied Eye in Monocular Instruments" (35).

When using a hand lens, an ordinary single-tube microscope, or any other optical instrument made for one eye, three points at least may be considered with regard to balancing the two eyes: (1) the intensity and angle of the light passing through the two pupils may be made roughly equal, so that the two irises may not tend to be in conflict with regard to contraction or expansion; (2) an arrangement may be made to facilitate the axes of the two eyes converging to the same point, and this point is best, in many or most cases, if situated at an indefinite distance [that is, so far off that the axes of the two eyes are parallel]; (3) the accommodation of the two eyes, which is more or less linked with their convergence, may be kept approximately the same.

The beginner with the microscope, as every one knows, has troubles because the unoccupied eye persists in seeing. If an opaque shade is placed in front of it, or if it is closed, matters are not better. The well-known rule is to keep the unemployed eye open, and gradually to learn to neglect everything it sees. More or less temporary diplopia often results. Also, in the course of years, the unemployed eye commonly sees less and less, and may in time become partially blind. The remedy is to change the eye at the tube; but this change is rarely made, because of initial difficulties.

If a translucent, but not transparent, screen is placed over the unoccupied eye, and the requisite time allowed to get used to it, the following advantages may result: (1) the intensities of the light reaching the two eyes may be roughly balanced by putting a sheet of white paper on the table under the unemployed eye; (2) there is nothing to lead the unemployed eye astray, and prevent it from converging with the other, or to keep their axes from being parallel; (3) the accommodation of the two eyes can change together, since the translucent screen prevents the unemployed eye from fixing on near objects; (4) if it is desired to change the observing eye, the screen may be arranged so that there is a constant reminder as to which eye is to be used. After observing with the right eye for years, it is possible to change to the left eye in a month or two, so that this eye gives images good enough for routine work.

Such a screen may consist of a circle of glass finely ground on one side. In the absence of ground glass, a smooth piece of waxed paper may be used instead.

Lens Holder.—The single corrected lens (cemented doublet or triplet), though inferior to a binocular of equal magnification and correction, has a place in scientific work because of its portability and durability. There is, in the writer's opinion, no discomfort on using a well-adjusted binocular magnifier for long periods. There is, however, some discomfort on using a hand lens for more than a few minutes at a time. A common method of holding the lens away from the eye is perhaps due to the discomfort from the unused eye being lessened when object and lens are held so far away that the unused eye can focus in their vicinity. It appears that a lens holder is required which not only compensates the unoccupied eye, but also induces the user to hold the lens at its correct distance from the eye. (This distance is 12 millimeters without spectacles; but for spectacle users the lens should be

close to the spectacle glasses.) This matter may be remedied by the use of one of the following holders:

1. *Suggested Lens Holder for Laboratory Use.*—A piece of sheet brass or aluminum is cut into the form of a spectacle frame, with two unequal circular apertures. The lens is fitted into a tight sleeve in the smaller aperture; and a disc of ground glass, 30 or more millimeters across, fastened over the larger aperture (Fig. 3). If the distance between the

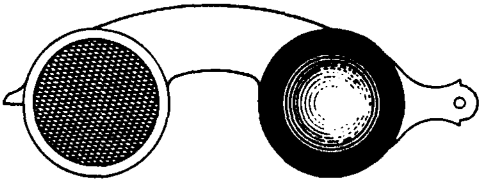

FIG. 3.—Plan (reduced) of a lens holder with a ground-glass disc on the left and a low-power corrected magnifying lens on the right. The point of the attachment for the handle is shown on the right. This lens holder can also be arranged to fold into a pocket case. The blackened marginal ring round the lens helps to exclude lateral light when the eye is close to the lens.

center of the lens and the center of the ground glass is 65 millimeters, there will be room in the width of the ground glass for the usual variations in interpupillary distance from 55 to 75 millimeters. A handle is arranged to be screwed on at one end; and by reversing the lens, if necessary, either the right or the left eye can be used.

2. *Suggested Lens Holder for the Pocket.*—The lens holder (Fig. 3), without the handle, is to be fitted into a case of brass or aluminum, which serves as a handle. For both the lens holders, three different lenses may be used. The lenses should be mounted so as to fit into the same sleeve. An achromatic planoconvex doublet magnifying about 3 times, and two Steinheil triplets with magnifications of about 6 and 10, may well be available.

Forms of Lenses.—For the low magnifications of 3 and 4 times a planoconvex achromatic doublet (Fig. 1) gives good results. This magnifying lens is to be held so that the eye looks always through the center of its flat side. To attain this, the lens and head are constantly moved in relation to the object (or the object is moved to and fro),

so that there is no need to rotate the eye in relation to the lens, as in looking through lenses fixed to the head (spectacles); or even to rotate the head slightly, as in looking through the eyelens of a compound microscope, with a stationary object.

No doubt the best hand or pocket lenses for magnifications from 6 to 10 are the usual triplets (Fig. 2) which are thick, symmetrical combinations of a biconvex lens, with a diverging meniscus of a more highly refractive and dispersive glass cemented to each side. Somewhat similar, but thinner, triple lenses were made by Steinheil, in 1865, and they have been recalculated since. (Triplets corrected only for paraxial rays [Woodworth] are, of course, not aplanatic, in the strict sense of the word.) Triplets with magnifications up to 10, are, in the writer's opinion, optically superior in the images they give to those of higher magnifications. The latter are also difficult to hold steady and focus. If higher magnifications are needed in special cases, they are provided by one optical firm in a series of three small anastigmatic lenses of four components each, magnifying up to 27 times.

Field of View and Aperture.—In the use of an ordinary corrected lens which is larger than the pupil of the observer's eye, the breadth of the field increases with the diameter of the lens (Fig. 4), the eye, of course, being kept close to the lens. The eye should be near the lens, for the width of the field diminishes as the distance of the lens from the eye increases. A large field is useful in searching over a specimen; and, hence, large lens combinations are usually to be preferred to smaller ones of similar magnification. Also, the lowest magnification which will show clearly the details wanted should be taken, because of the larger portion of the object seen at once.

The *numerical aperture* measures the amount of light received from the object, and is the sine of half the angle of the cone of light which will pass through the pupil into the eye from any point in the object (for a lens in air). The numerical aperture, called here simply *aperture*, is

the most important figure connected with the microscope. There can be no understanding of the microscope without understanding aperture. The aperture of a magnifying lens larger than the pupil depends on the diameter of the pupil of the observer's eye (Fig. 4). Thus both increase in a dull light. (This does not usually happen in the eyepiece of a microscope, which is, of course, a magnifying

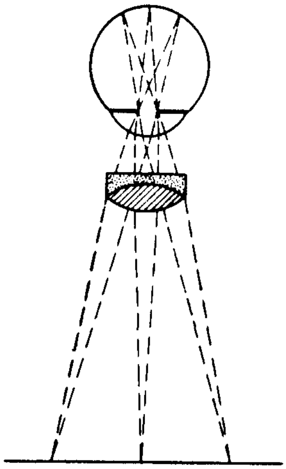

FIG. 4.—Diagram of eye and low-power corrected lens, to show field of view. Best vision is obtained when the eye is centered with the magnifier, as here. Three cones of rays (bounded by the iris) are shown from points at the center and edges. It is obvious how moving the eye farther from the lens will decrease the field of view.

lens combination, because the pupil of the eye is usually larger than the exit circle at the eyepoint of the microscope.) Since the aperture of a lens used as a magnifier also depends on its focal length, which is inversely proportional to its magnification, the brightness of an object seen through a corrected lens larger than the pupil is equal to the brightness as seen with the unaided eye; except for a loss of 8 per cent, more or less, in reflection at the two surfaces. (An increase in magnification of the eyepiece of the compound microscope, on the other hand, mostly leads to a marked decrease in illumination, which has to be compensated for by lessening the density of the screen before the source of light.)

Mode of Using Lens.—In all cases, the hand lens, for the best results in sharpness of image or extent of field, must be held as close to the eye as spectacle glasses, and at right angles to the axis of vision; the flat or the concave side being next to the eye. Any slight obliquity may perceptibly injure the definition of planoconvex corrected lenses. This is not so much the case, however, with the thick triplet; in which, because of its approximation to the spherical form, a slight obliquity, which is almost inevitable in the ordinary use of a hand lens, may not be markedly prejudicial. The triplet can also be used with either side next the eye, as it is symmetrical in this respect.

It is advantageous to shade the eye which is looking through a lens from extraneous light. Many years ago, Leeuwenhoek mounted each of his little lenses in the center of a sheet of metal, and this doubtless helped him in getting his remarkable results. Hence the margin of the holder around a hand lens may well be fairly wide and blackened.

Besides their use in examining objects in the field, hand magnifiers of 3 to 10 times magnification are essential for examining the back and front lens surfaces of objectives, the upper surface of the eyelens of the eyepiece, etc., to ensure optical cleanliness, and also to note the size of the condenser circle at the eyepoint.

In using hand lenses with magnifications of 3 to 10, if the optical rules are disregarded, one takes an uncorrected lens, and holds it at reading distance from the eye, with the other eye uncovered. When the rules are regarded, a corrected doublet or triplet is fixed in a holder with ground glass over the unused eye, so that the lens is kept at right angles to the optic axis, and 12 millimeters from the cornea, or close to spectacle glasses. One looks through the center of the lens, and moves it over the object, following it mainly by movements of the head; instead of, as in spectacle glasses and verants, rotating the eye also.

Rules Disregarded	Rules Regarded
1. Small field.	Largest possible field.
2. Details blurred.	Sharpest details.

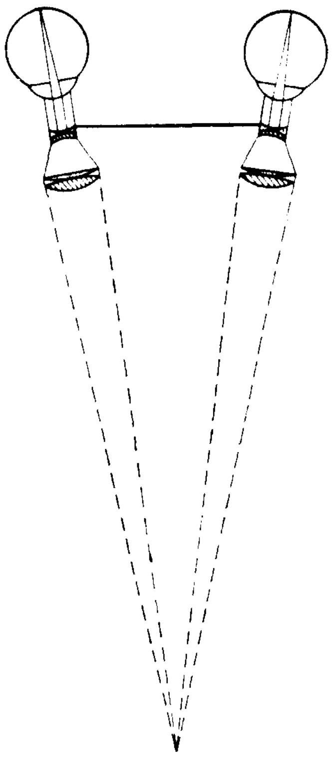

FIG. 5.—Diagrammatic sectional view of spectacle magnifiers. Each consists of an objective of two lenses, and an eyepiece of two components. The diameter of the field of view on the object is about five centimeters. The definition is good to the edge of the field, and the stereoscopic effect is excellent. The figure shows a magnifier for normal vision, adjusted to the particular interpupillary distance of the wearer. Spectacle wearers may have caps fitted over the eyepieces, with their correcting distance glasses, including corrections for astigmatism. The writer found that the magnifiers as figured may be used with advantage for dissecting. The two miniature telescopes can be fixed in circular openings cut in the centers of convex distance spectacles. An adjustable frame can be obtained, in which the distance of the lenses can be varied to suit the interpupillary distances of different observers.

Rules Disregarded	Rules Regarded
3. Blurring increasing to the margin.	Sharp to the edge.
4. Discomfort from the unoccupied eye.	No marked discomfort from the unused eye.
5. Side light in the observing eye.	Side light shut out by blackened margin around lens.
6. Right eye usually used alone.	Eyes alternated, the position of the lens being a reminder.
7. Eyes soon fatigued.	Work may be carried on for hours without fatigue.

Binocular Magnifiers.—The low-power magnifier, consisting of a single corrected lens on a fixed stand, or any other fixed monocular magnifier, is well replaced, with marked gain, by a good form of low-power binocular magnifier. Binocular vision aids, in ways which will be discussed later, in long-continued work. Stereoscopic relief, which is shown by some binoculars, gives a sense of reality not attainable by one eye alone. Whether stereoscopic effect is necessary for most scientific work seems doubtful. But of the advantage of the use of two eyes, with or without stereoscopic effect, there can be little doubt.

If two corrected lenses, with magnification below or up to 3 times, are placed before the two eyes, there is excessive convergence of the optic axes, because the lenses have to be held as close as their focal lengths from the object. This excessive convergence may be lessened by the use of two rhombohedral prisms, giving two total reflections each. These magnifiers are worn like spectacles (27). The optical effect of the prisms on the aberrations is that of a plate of glass with parallel sides, as thick as the path of light in the prism. Similar prisms can be used in the monobjective binocular to vary the distance between the eyepieces (Zeiss).

An excellent spectacle magnifier (Zeiss), with a magnification of 2 and a working distance of 20 centimeters, consists of two special Galilean combinations (miniature telescopes) properly convergent. The writer can testify that these glasses are well fitted for dissecting, because of their lightness and their optical corrections (Fig. 5).

For the magnifications of 3 to 10 considered in this chapter, the lowest powers of the twin-objective (Greenough) binocular are excellent. This instrument (Fig. 11) consists of two compound microscopes set at a small angle, with a set of erecting (Porro) prisms below each eyepiece. Special low-power instruments of this kind are now made with large eyepieces and, hence, possess the presumably desirable quality, for low-power work, of a large field of view. These low-power binoculars may well be detached from their stands, and carried in the hand, being used like a magnifying lens.

A miniature Greenough binocular is now made by Leitz, to be worn like spectacles. These three magnifiers give (1) erect images, (2) binocular vision, and (3) stereoscopic effect. The value of erect images and binocular vision is not to be doubted. The *scientific* value of stereoscopic effect is, however, sometimes doubtful, and it does not seem as if other desirable qualities should be sacrificed to get it. Thus a fourth low-power binocular might perhaps be made by the combination of a Swan half-silvered cube with Porro erecting prisms. Such a binocular would have erect images, but only a decided stereoscopic effect when the eyepiece circles were partly cut off internally by the irises of the eyes, by making the distance between the eyepieces slightly smaller than the interpupillary distance. This binocular would have parallel tubes, and objectives of higher aperture than the Greenough; and would permit of any power objective being used. A trial made by the writer seemed to give satisfactory results. (Perhaps the instrument could be made with only four reflections on each side.)

In these four binocular magnifiers, the distance between the centers of the top lenses must be adjusted within a millimeter to correspond with the interpupillary distance, for the best vision. The correct distance should give the maximum of light to each eye, and also a complete field for each eye. The maker should have arranged the two fields to correspond exactly, both as to extent, and as to

20 APR 1931
position and focus of their centers. If this is not the case, the instrument tires the eyes more or less; and double vision (diplopia) may persistently occur.

These binocular magnifiers are made for an observer with normal sight as regards accommodation for near and distant objects. If this is not the case, the observer should wear glasses, usually distance glasses. This is also specially important in case of astigmatism. Small centered correcting glasses may be fitted over the top lenses of the instruments, and are better than spectacles.

A binocular magnifier with a magnification of about 3 or 4 times is useful, or even necessary, for making drawings of microscopical preparations; the outlines being drawn with the camera lucida, and the details put in from the microscope while the drawing paper is under the magnifier. Some such binocular magnifier is almost essential for comfortably dissecting parts of animals or plants in preparing objects for the high- or medium-power microscope. It is practically superior, for this work, to a corrected hand lens.

Summary.—In this chapter it is explained how lenses are corrected and more or less freed from their chromatic and spherical errors. The advantages to be gained by using such corrected lenses are set forth. A method of compensating the unoccupied eye by a disc of ground glass is given, and this is shown to allow comfortable work with a single corrected lens. The kinds of lenses to be used are described, and the importance of *field of view* and of *aperture* is stated. The correct methods of using lenses are given, together with the losses which follow the use of wrong methods. Instruments affording binocular vision with the lowest powers are described. Two suggestions are offered: (1) the use of a lens holder which provides a translucent screen for the unoccupied eye, and (2) trying out an erecting low-power binocular with parallel tubes and variable stereoscopic effect, made by the combination of Swan and Porro prisms.

Practical Points

1. A *corrected* hand lens should be used in scientific work.

2. The plane or the concave side of an unsymmetrical corrected lens should be next the eye.

3. The hand lens should be held as close to the eye as are spectacle glasses; that is, about 12 millimeters.

4. In using a hand lens, the unoccupied eye may be compensated by a disc of ground glass in a frame.

5. The binocular is to be preferred to the single lens.

6. The spectacles worn when using a binocular should (usually) be distance spectacles, but eyepiece caps are better.

7. Glasses correcting astigmatism or focal differences should be retained.

8. The surface of the spectacle glasses should be kept at right angles to the optic axis, by duly inclining the instrument.

9. With the binocular magnifiers, both the distance between eyepoints and the focal distance should be adjusted between the possible extremes. The focal distance should be near the maximum.

10. If reading spectacles are worn when using a hand lens, it will be found that the lens gives the best image when held about 3 millimeters towards the nasal side of the eye.

11. Since reading spectacles may have about 5 millimeters less distance between centers than distance spectacles, reading glasses should be worn with binoculars with converging tubes, unless these are corrected for distance vision. In the latter case (Zeiss, Leitz, etc.), distance glasses should be fitted as eyepiece caps on the instrument. Otherwise, eyestrain results from bad centering.

CHAPTER II

USE OF THE COMPOUND MICROSCOPE

Classification of Useful Magnifications.—The meaning of *aperture* was given in the last chapter. The aperture method may be applied to measuring the useful cone of light falling on an object, as well as to measuring the cone of light admitted by the objective from the object. (Compare Figs. 6 and 7.) The average of these two apertures

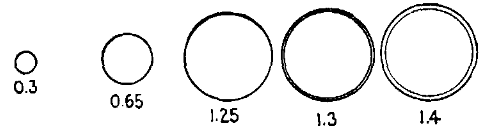

FIG. 6.

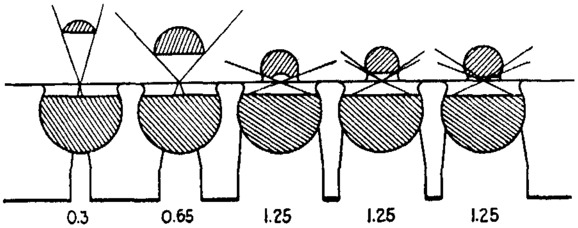

FIG. 7.

FIG. 6. This shows the objective aperture circles and the condenser aperture circles seen on the back of objectives of the five named apertures, with a condenser cone of a maximum aperture of 1.25. The radii are made proportional to the apertures.

FIG. 7.—Diagram showing upper lens of water-immersion condenser and front lens of each of five objectives of apertures as in Fig. 6. The maximum condenser cone has an aperture of 1.25, of which the limiting rays are shown.

is the *working aperture.* The numerical value of the working aperture is the most important figure in practical microscopy. One thousand times the working aperture forms the maximum *useful magnification.* Hence a classification of magnifications is a classification of working apertures. For the purposes of this book, the following classification is offered. (For immersion objectives and

condensers, the aperture as defined above is to be multiplied by the index of refraction of the substance between the front lens and the object; and, in the case of several such substances, is kept to the limit of the lowest such refractive index.)

CLASSIFICATION OF USEFUL MAGNIFICATIONS IN THE COMPOUND MICROSCOPE

	Minimum and maximum magnifications	Working aperture for maximum magnification	Illumination
Low:			
Very low	1 to 10, inclusive	0.01	Plane or concave mirror
Low	10 to 100	0.10	
Medium:			
Low medium	100 to 250	0.25	Dry achromatic condenser
Medium	250 to 450	0.45	
High medium	450 to 700	0.70	
High:			
High	700 to 1,000	1.00	Water-immersed achromatic condenser
Very high	1,000 to 1,350	1.35	

Hence low-power microscopes in this scheme are those that have useful magnifications reaching to 100 times, and working apertures (which at these low powers are usually identical with objective apertures) reaching at least to 0.1. Such microscopes are: the monocular microscope, used without a condenser, and with objective magnifications from 2 to 8; the monobjective binocular, used similarly; and the popular twin-objective (Greenough) binocular, which has paired objectives of a single doublet or triplet each.

Medium-power microscopes have useful magnifications up to 700 times, and working apertures up to 0.7. They are either monocular or monobjective binocular. They have, usually, dry objectives with initial magnifications from 8 to 40, and apertures from 0.15 to 0.75. An achroma-

tic or aplanatic dry condenser gives the best results; for the uncorrected condenser in common use allows much glare.

High-power microscopes, in this scheme, may have useful magnifications up to 1,350. They may be monocular, or monobjective binocular. They employ dry objectives of high aperture, up to 0.85 or 0.95; and also water-immersion objectives up to 1.2 or 1.25, and oil-immersion objectives up to 1.3 or 1.4 aperture. They require an immersion condenser, achromatic or aplanatic. Yellow-green light adds decidedly to their defining power, especially if they are not apochromatic.

Structure of the Compound Microscope.—The construction of the compound microscope is well described, with figures, in the catalogues and booklets of instruction issued by the six or more chief optical firms of the world. As is well known, a more or less corrected condenser throws an image of a *source of light* (radiant) on the object. Then a highly corrected objective throws an image of the object (above or) in the plane of the diaphragm of the eyepiece. A virtual image of this image is formed by the eyepiece (specially corrected for this work), usually at an indefinitely large distance. (For the purposes of calculation, however, the distance of the virtual image is taken as 250 millimeters.) The *field of view* (Fig. 8) is bounded primarily by the diaphragm in the eyepiece S_3 and the magnified image of this diaphragm bounds the *image-field* seen through the eyepiece. The field of view on the object S_2 is a small circle equal in diameter to the breadth of the image-field divided by the total magnification. This is the *object-field.* The field of view at the source of light S_1 is equal to the object-field multiplied by the inverse of the diminution caused by the condenser. This is the *source-field.* All three, image-field, object-field, and source-field, depend for their size on the diaphragm of the eyepiece.

One of the first rules of modern microscopy is that the source of light should be diaphragmed to be equal to the source-field, as above defined.

When this is the case, precisely that circle of the object which is seen is illuminated; and there is no useless marginal light entering the microscope to cause glare.

The iris diaphragm of the (focused) condenser determines the used aperture of the condenser, which is one of the most important adjustments to be made in microscopy.

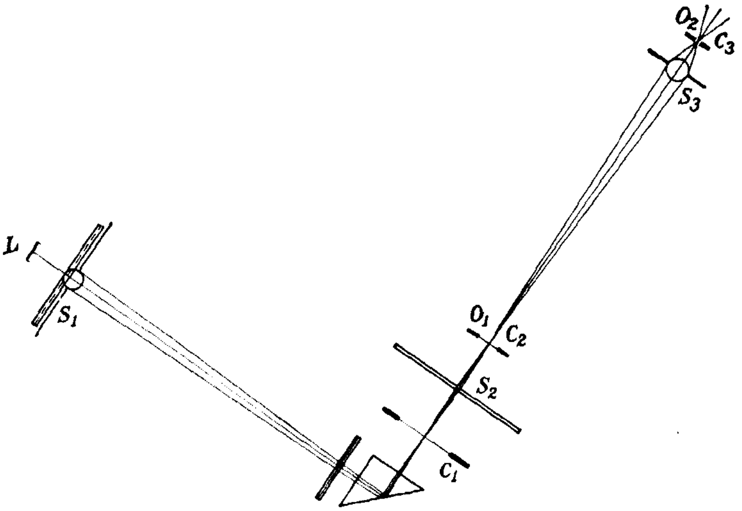

FIG. 8.—Diagram showing the different fields in the microscope, depending on the diaphragm in the eyepiece. The lamp L illuminates a ground-glass screen, close to which a diaphragm (field-diaphragm) bounds a circle, in this case equal to the source-field S_1. After leaving the color screen and the reflecting prism, the rays from the source-field are focused by the condenser to form a small circle S_2 on the object, in this case equal to the object-field. The rays from the object-field, altered by having passed through the object, are focused by the objective in the plane of the diaphragm of the eyepiece (magnifier pattern) which they just fill, S_3. They are then focused by eyepiece plus eye to form a circle on the retina (not shown). (O and C represent aperture circles, not fields.)

This aperture must be filled with an even light. The light-filled image of this aperture can be seen on the back of the (focused) objective as the aperture circle of the condenser; or briefly, *condenser circle* (Fig. 9). On the back of the objective there can also be seen an outer circle, the aperture circle of the objective (briefly, *objective circle*), which is usually determined, not by a special diaphragm, but by the margin of the objective lenses.

The average of the (diameters or radii of the) condenser circle and the objective circle measures the working aperture. The condenser circle is filled with light from the source of light. The dim ring formed by that part of the objective circle which extends beyond the condenser circle (Fig. 9) is lighted only, in the absence of glare, and with all adjustments correct, by light diffracted, reflected, or refracted from the object field.

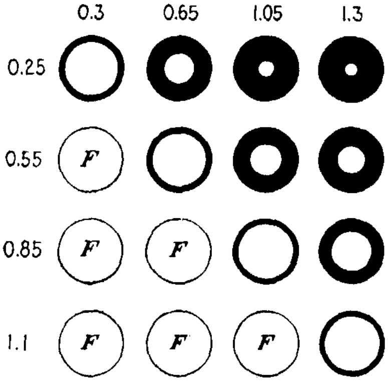

FIG. 9.—This shows, on the back of the objectives, condenser circles with apertures from 0.25 to 1.10, with objectives from 0.3 to 1.3 in aperture. The letter *F* shows the presence of "flooding" with light, due to the excess of the condenser aperture over that of the objective. (The back lenses of the different objectives are presumed to be equal.)

A second chief rule of modern microscopy is that the condenser circle should approach as near to equality with the aperture circle of the objective as is possible without causing glare.

Above the eyelens of the eyepiece (at the eyepoint) are the images thrown, by the eyepiece, of the objective and condenser circles. These, of course, also consist of a dim ring with a bright circle inside (and have been called the Ramsden disc, the exit pupil of the microscope, etc.). Here they will be called the *eyepiece circles* (objective eyepiece circle, or condenser eyepiece circle). The eyepiece circles should be sufficiently above the mounting of the eyelens to be level with the pupil of the eye. The position of the eyepiece circles (the *eyepoint*) needs, of course, to

be somewhat higher above the mounting for spectacle wearers than for normal eyes.

If the eyepiece circle (of the objective) is larger than the pupil of the observing eye, the used aperture of the objective is cut down correspondingly, and there is a waste of aperture, which is, however, the most costly thing about a microscope. If the condenser eyepiece circle at the eyepoint is equal to the pupil of the eye, the slight movements of the head, which are essential in looking through the microscope, cause fluctuations in the light. Consequently, it should be (and is usually) arranged in the compound microscope that the aperture circles at the eyepoint are smaller than the pupil of the eye.

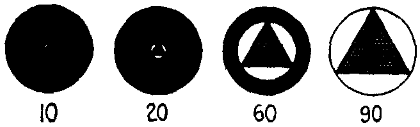

FIG. 10.—Diagrams of an object seen through the microscope with a 3-millimeter diaphragm on the radiant, and concentric objectives of 10, 20, 60, and 90 initial magnifying power.

Illumination.—With microscopes of low power (as defined above), the plane mirror may supply light of large enough aperture to the object for transparent specimens, if a sufficiently large source of light is used. Regarding the plane mirror as a window through which the source of light is seen by an eye at the object, the aperture of the incident light is proportional to the apparent breadth of that part of the mirror which is seen to be filled with light from the source. If the source is not large enough to fill the mirror, or if the mirror is moved farther from the object, the aperture is lessened. Hence, if the aperture is too small, the source of light (perhaps a matt electric bulb) can be put closer; and *vice versa.* The same is the case with the portion of sky seen through a window. For these low powers, the maximum aperture for transparent objects is usually below 0.15.

The concave mirror may be used, especially on low-power microscopes, when there is a small source of light. If

the distance of the lamp is fixed, the concave mirror is focused on the object by moving it up and down. Since the aperture of a concave mirror, so used, may be sometimes 0.3 or more, it should be cut down with diaphragms for the low-power microscope, which only needs about 0.1 aperture. If placed directly on the mirror, such diaphragms should be elliptical. (Since both plane and concave mirrors are oblique to the incident light, it is obvious that they, too, should not be circular, but long rectangular or elliptical.)

For the medium-powered microscope with dry objectives, an achromatic dry condenser (or an aplanatic condenser used with yellow-green light) is to be employed by preference. If the user of the microscope has to employ a cheap, uncorrected condenser, he loses by being unable to get the maximum useful magnification; because he cannot get a large enough condenser aperture without glare, and so has to be content with low eyepieces.

For the high powers of the microscope, a corrected immersion condenser, of at least 1.25 aperture when used as a water immersion, is essential for the best results. If, for instance, the 100 oil-immersion objective of 1.3 aperture is used with an uncorrected dry condenser, its maximum useful magnification (without glare) will be cut down from nearly 1,300 to something less than 800, in the writer's experience; that is, instead of using a 12.5 eyepiece, a 7 eyepiece is used for best vision.

A third important rule of modern microscopy is that the light should approximate to yellow-green monochromatic, whenever possible.

Focusing.—With all condensers, the focusing is to be made on the edge of the diaphragm on the source of light. This diaphragm is to be adjusted to equal the source-field, as already defined. Having put the object in the field of the microscope, and turned the light on it (which can be done easily while looking at the back of the objective without an eyepiece), the object is focused with the lowest objective on the nosepiece. Then the mirror is turned so as

to bring the edge of the diaphragm on the source into view, and this is focused by the condenser. Then, the part of the object to be studied having been found, a small diaphragm is put on the source (for the high powers, usually a 3-millimeter diaphragm). The image of this diaphragm is placed in the center of the field over the portion of the object to be examined. Then the high-power oil-immersion objective is focused down until there is oil contact. It is then raised slightly and lowered to focus on the edge of the small image of the diaphragm, which will be readily visible. The object is easily found in the circle of light. The approach to the focal point is shown by a rapid increase of light. In this way of focusing it is seldom that the high-power water or oil-immersion objective comes into contact with the cover-glass. (A reflecting prism is preferable to a plane mirror since it gives a single image of the diaphragm, which is easy to focus.)

Objectives.—Dry medium and dry high objectives are best used on objects in air. For objects in any liquid, they require adjustment by a correction collar (or by altering the tube length); and the same is the case if they are employed with cover-glasses of the wrong thickness. The cover-glasses used should be slightly under 0.17 millimeter, with objects in water or balsam. Hence one might think dry objectives would be useful, if specially corrected by the optical firm making them, for employment *without* cover-glasses. Such objectives are now made for use in metallurgical work. They can also be utilized in ordinary work, as Coles (46) has shown with regard to the stained smears used in pathological laboratories. Also, for metallurgical work, medium-power objectives are sometimes made to be used not dry, but as oil immersion. These might also be useful in laboratories where the high-power oil-immersion objectives are usually employed without cover-glasses. (No doubt, even serial sections could readily be mounted so as to be conveniently viewed without covers.)

Water-immersion objectives are best used on objects in water. If used on objects in balsam, errors are introduced, increasing with the thickness of the layer of balsam, though these errors can be compensated for by altering the correction collar for every change in the thickness of the layer. If used on objects in air, the aperture is cut down to 1.0, at most. These objectives require covers near 0.17 millimeter thick for the best images. Water-immersion objectives are convenient, and almost essential when many mounts are made in watery fluids. They give better images than dry objectives on objects in water or balsam; and often give better images than oil-immersion objectives on objects in water; especially with covers 0.17 millimeter thick.

The high oil-immersion objectives are to be used primarily on objects mounted in balsam or immersion oil. They can be used without a cover-glass if the tube length is slightly increased (by about 25 millimeters for the 100 fluorite objective) to correct for the lessened refraction, or if the objectives are specially corrected for use without a cover-glass, as are the best of those used in metallurgy. Oil-immersion objectives give poorer images of objects mounted in air, the aperture being cut down to a limit of 1.0. But if objects are in optical contact with the under side of the cover-glass, they may be well seen with the oil-immersion objective, even though mounted in air. Such objects are diatoms fused to the cover, or connected with it by some transparent high-refractive substance, such as hyrax; also bacteria or spirochætes smeared on the cover, stained, and dried. High oil-immersion objectives can only be well used on objects in a watery liquid which are less than about 10 microns from the under side of the cover. This condition must usually be compensated for by appropriately increasing the tube length. When used in this way, the aperture will be cut down by total reflection to an upper limit of usually 1.33 (or slightly more, in case of optical contact with the cover).

A fourth rule of microscopy is that the best images are attained with cover-glasses 0.17 *millimeter thick, even with oil-immersion objectives.*

Eyepieces.—Too low eyepieces give a curved field, and do not bring out the full capabilities of the objective. To do this requires a total magnification of 500 to 1,000 times the working aperture. Perhaps no eyepieces giving a total magnification less than 750 or 1,000 times the working aperture need usually be employed, when the adjustments of the microscope are fairly correct. There are several practical disadvantages in changing eyepieces. (With yellow-green light, compensating eyepieces can be fairly well used for the lower achromatic objectives, as well as for the higher achromatic and the apochromatic objectives.) It is not difficult to select the three or four objectives on the nosepiece so that one eyepiece will give nearly the best results for all. This eyepiece may be selected so as to give about the maximum useful magnification with the highest powers. Since compensating eyepieces have high eyepoints, a high compensating eyepiece can well be used with a low apochromatic and two or three high achromatic objectives on the nosepiece.

Summary.—A classification of useful magnifications into low, medium, and high, is suggested. This classification applies primarily to objectives; but condensers cannot be omitted from consideration, since they aid in fixing the working aperture. A short account is given of some of the optical phenomena in the compound microscope. The terms, *image-field, object-field, source-field, condenser circle, objective circle,* and *eyepiece circle* are defined. The illumination of the low-power microscope with the plane or the concave mirror, of the medium-power microscope with the dry achromatic condenser, and of the high-power microscope with the corrected water-immersion condenser are described. Methods of focusing the condenser and the high-power objective are given. The proper use of dry, water-immersion, and oil-immersion objectives is stated. Four important rules of modern microscopy are given in this chapter.

Practical Points

1. Working aperture is more important practically than mere objective aperture.

2. It may be usually more convenient to have a separate low-power microscope, than to have to remove the condenser from a medium or high-power instrument.

3. The source of light should be made equal to the source-field by a diaphragm close to the source.

4. The used aperture of the condenser should as nearly equal the aperture of the objective as can be, without glare.

5. The plane mirror can be employed with a large source of light (without a condenser), for low powers.

6. The concave mirror can be used when the source of light is small, but only for low powers.

7. A dry corrected condenser suffices for dry objectives.

8. A water-immersion condenser should be used with high-apertured objectives, for ultimate investigation.

9. Putting a 3-millimeter diaphragm on the source of light facilitates focusing immersion objectives of high aperture.

10. Dry objectives are best used on objects in air. They can be specially made and corrected for use without covers.

11. Water-immersion objectives are best used for objects in water.

12. Oil-immersion objectives are best used on objects (in balsam or) in immersion oil, or on objects in optical contact with the cover-glass. They may be used without cover-glasses by increasing the tube length.

13. Frequent changing of eyepieces has disadvantages. The objectives can be selected so that only one eyepiece is usually necessary.

CHAPTER III

THE TWIN-OBJECTIVE BINOCULAR

Low-power Microscopes.—Low-power microscopes may include the following instruments: (1) The low-power monocular microscope, and the low-power monobjective binocular, used with objectives up to 0.2 or 0.3 aperture. Both of these reverse the image. (2) The twin-objective binocular, with objectives up to about 0.1 aperture; the Lihotzky binocular attachment; and the proposed microscope consisting of Porro prisms combined with a half-silvered Swan cube as a monobjective binocular. These give an erect image. Different binoculars have either a constant or an alterable stereoscopic effect. Erect images, binocular vision, and some stereoscopic effect are useful in a low-power microscope. The twin-objective (Greenough) binocular can only be used with low objectives, while the other forms can be used with medium or high powers. They will be described later. The following is a comparison between the twin-objective binocular and the monobjective binocular:

Twin-objective Binocular	Monobjective Binocular
1. Erect images.	Erect images only if Porro prisms, or erecting lenses, are used.
2. Permanent stereoscopic effect.	Alterable stereoscopic effect.
3. Converging tubes.	Parallel tubes, usually.
4. Special objectives.	Ordinary objectives.
5. Aperture up to about 0.15.	Any aperture.
6. Fields of view inclined about 15 degrees to each other.	Fields of view coincident in plane.

Convergence of Tubes.—In the twin-objective binocular (Fig. 11), the two microscope tubes (each furnished with a compact set of Porro erecting prisms) are so inclined to one another that, when in correct adjustment, the axes of

the two tubes meet on the object, and both tubes are in focus simultaneously; so that the two fields of view are similar and equal in extent. This convergence (of 13 to 16 degrees) entails a parallel convergence of the eyes; which is probably accompanied, more or less, by accommodation

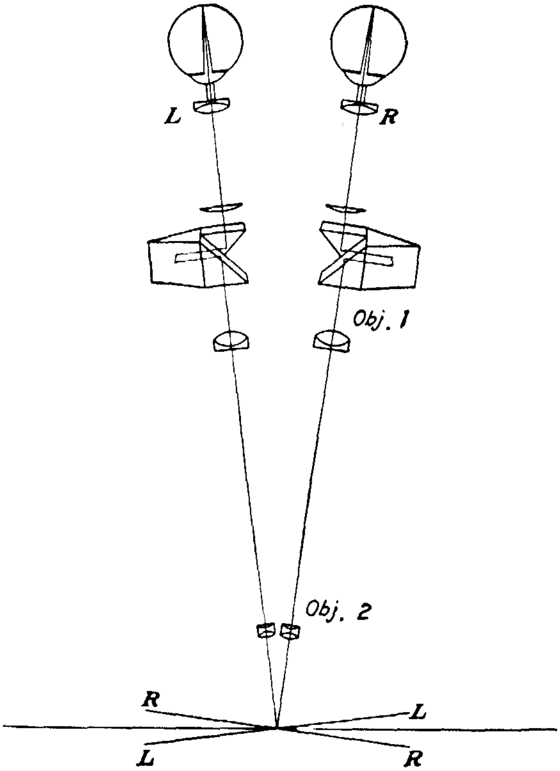

FIG. 11.—Diagram of the construction of the Greenough binocular, the angle between objectives (and between eyepieces) being 15 degrees. The course of the optic axis through the Porro prisms is indicated. The different object planes of the two twin objectives are shown. The different positions of the lower and higher power objectives are indicated. The interocular distance is varied by rotating the two prism sets, which does not alter the optical tube length. Note that there are four total reflections on each side. (Periplane eyepieces are shown here.)

to suit. The distance of the point of convergence for the eyes is 8½ to 10 inches. (Some makes of Greenough have the objectives converging more than the eyepieces, probably through obliquity of prisms.)

If the interpupillary distance is slightly different from the distance between the eyepoints of the eyepieces, part of the eyepiece circle in each eyepiece, or in one only, may fall outside the pupil of the eye, and there may be a loss of light and aperture. It might thus be useful if a clamp were provided to secure the distance between the eyepoints unaltered for any constant user and any pair of eyepieces. The eyes, however, must be kept at a fixed distance from the eyelenses (usually quite close to them) to retain the correspondence between interpupillary and eyepoint distances. The correct distance between the eyepieces is attained when there just appears a complete circle to each eye when the other eye is closed. In some binoculars, there is a shutter for each eye (126) to aid in this adjustment. The correct distance between the eyepieces gives the maximum of light to both eyes together. The distance between the eyepieces can be measured by laying a flexible millimeter rule across the eyepieces from the outer edge of one to the inner edge of the other.

It is evident, from the construction of the twin-objective microscope, that the focusing of a plane object will only be correct along the median line from front to back. So, on right and left, the focus of one tube will be more or less above, and the focus of the other tube below, the plane of the object (Fig. 11). This puts a limitation on the use of the instrument with medium or high powers, and renders it fitted for viewing solid, rather than plane, objects. If used for plane objects, its stereoscopic effect is of small use.

The adjustment of the instrument can be tested with a plane object, such as a printed card. If the adjustment is correct, both tubes should be simultaneously in focus at the center front-to-back lines of their fields, and the contents of the two fields should coincide to the margins. With low powers, the correct focus for each tube can be ascertained by putting a printed card on the stage and closing one eye. At the correct focus for either tube, the center line of the field is sharp, while both right and left sides are more or less dim.

Eyepieces and Objectives.—The different pairs of eyepieces of the twin-objective binocular should be parfocal; that is, have their front focal planes at the same position in the microscope tube. For this, appropriate collars are to be fitted, as is done by several makers. If the eyepieces are not parfocal (in this sense), the focus of the microscope will have to be altered each time the eyepieces are changed. The two fields of view will then cease to coincide perfectly. Orthoscopic and similar eyepieces with high eyepoints are doubtless best for eyepiece magnifications above 10 times, if such enlargements are needed.

The twin objectives of this binocular, which are usually cemented doublets or triplets, should also be parfocal, that is, should have their positions calculated so that there will be no need of any marked change of focus when they are changed. Some optical firms now make a revolving changer for the three lowest-power twin objectives (27, 126). The maximum aperture of the ordinary series of twin objectives is about 0.1 and, hence, the maximum useful magnification is near 100 times. (The aperture of any of these objectives can be found by dividing the radius of the object-glass by the distance of its edge from the center of the focused object.) Some optical companies now make objectives for this binocular giving magnifications of 200 or 300 times, which should entail higher apertures than 0.1. Water-immersion twin objectives are useful for the examination of marine or fresh-water organisms, since with dry objectives a layer of water introduces spherical errors, increasing with its thickness. Some optical firms now make a twin-objective binocular with larger eyepieces, thus giving a larger field; which adds to the sense of reality in the magnified image, and may be of practical use in dissection (27, 90, 126).

Illumination.—The twin-objective binocular is best fitted for opaque illumination. This may be obtained from a low-voltage lamp above the stage, with a condensing lens, or pair of lenses, and a screen of daylight glass. The background may be black or opal glass, or yellow-green glass above a white card.

When used on transparent objects, the objectives with an aperture of 0.1, or less, sometimes get obviously a too large cone of light from the usual concave mirror. The aperture of the mirror should then be cut down, as already stated. The plane mirror may well be cut across from front to back (Fig. 12), and the halves set together at the proper obtuse angle to light each tube (22); or an appropriate thin double prism (Fig. 12) may be fitted beneath the

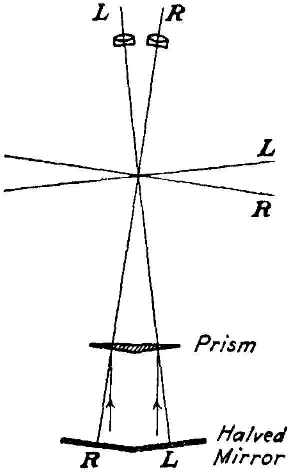

FIG. 12.—Diagram of the twin objectives and object stage of the Greenough binocular, showing the position of the double prism (Nelson) or of the double plane mirror (Akehurst) used for equalizing illumination in the two tubes.

stage (Nelson), if enough work is done with transparent objects to require such help.

The source of light for transparent objects may be a white cloud, or a large enough ground or frosted sheet of glass (with a screen of daylight glass) before a tungsten lamp. Or a matt or frosted lamp can be used at the right distance. A disc of flashed opal glass can replace the plane mirror for low powers. Yellow-green color screens could be used, to rest the eyes and improve the definition, when observation of the natural colors is unnecessary.

A screen should be kept in front of the eyes to keep off light from lamp or window.

Use.—In adjusting a twin-objective binocular fitted with a focusing eye-tube or a focusing objective, the instrument is first focused as a whole for the center of the focal range and the center of the field of view of the fixed tube. Without moving the rackwork, it is now focused for the center of the field of the second tube, by the focusing eyepiece or objective. (It seems doubtful, however, if this adjustment is worth having.) If the two fields do not coincide as to extent, and the sight is not normal as to focus or accommodation, distance spectacles should be tried. In some cases, the fields may be made to coincide (if both objectives are correctly centered) by shifting back one of the prism sets which had been moved in its fastenings in the process of cleaning. Often the lack of coincidence of fields, which is a common fault, is due to the twin objectives in use having come from some other instrument of the same make.

One defect in some makes of twin-objective binocular is the difficulty of getting at the prisms in their casing, and the objective lenses in their often long tubes, to clean them. A year of use in a laboratory without cleaning may accumulate much dust and many smears on prisms and objectives, and will deteriorate the image correspondingly. It may also deteriorate the user's sight; for he may tend, unconsciously, as the days go on, to employ brighter light in attempts to overcome the fog. If the whole instrument is not covered when not in use, eyepiece caps may be obtained to fit over the eyepieces.

The centering screws on the twin objectives of the Greenough binocular should not be altered except by the optician. The twin objectives are separately adjusted for each instrument, each objective to its own set of prisms, so that the optical axes meet at the center of the object-field; and, therefore, twin objectives from different instruments of the same pattern should not be interchanged. Pairs of matched eyepieces (though not single eyepieces) from instruments of the same pattern by the same maker

are interchangeable, but those by different makers are usually calculated somewhat differently.

Tests.—A printed card is a good test for focal differences and differences in extent of field. To test the resolution, diatoms have been used by the writer, such as the coarser forms of Moeller's test slide of twenty. It is useful to test the instrument to the limit occasionally; since otherwise, in the course of ordinary work, defects in the image may go unnoticed for years. In all testing, the two fields should be examined for coincidence as to extent, and the focuses of the two tubes at the center of each field should be tested for identity (with distance vision).

Literature.—The Greenough, or twin-objective, binocular was introduced in 1897. The original account of it by Czapski and Gebhardt may be found in the *Zeitschrift fuer wissenschaftliche Mikroskopie*, for that year.

Orthomorphy.—This term applies to binocular vision through an instrument which resembles ordinary binocular vision without an instrument. No microscope gives it correctly. Theoretically, perfect orthomorphic vision requires conditions which cannot be fulfilled (Von Rohr); and by so much as they fail of fulfilment, the orthomorphic effect is impaired. A nearer approximation to orthomorphy can be made by putting diaphragms in front of the twin objectives (Zeiss); but these have mostly been discontinued, since they lessen the aperture. How far the presumable disadvantages of wide departures from orthomorphy are counterbalanced by the advantages of larger apertures and higher magnifications is to be decided by practice. The trend at present seems to be to increase both apertures and magnifications. As already stated, stereoscopic effect does not seem of great scientific importance, however pleasant and convenient.

(By Greenough's reflecting prisms under the object [Zeiss], the lateral and under parts of a small object, such as an insect, can be seen with the binocular after the upper surface has been examined.)

Summary.—The twin-objective binocular has erect images and marked stereoscopic effect, both of which are useful for dissection. Little light is lost in passage through the prisms, since they are made of a specially transparent glass, and the four reflections are total and perfect. Owing to the convergence of the tubes, the focus on a plane object is only perfect at the central front-to-back line of the field, where the axes of the twin objectives should meet. But this lateral difference of focus may sometimes be included, with low magnifications, in the normal range of accommodation of the eyes. Perfect coincidence of the two fields of vision requires: centering of the axes of the matched objectives on the center of the field, when in focus; mutual adjustment of objectives and prism sets; equal optical tube length for both tubes; and matched parfocal eyepieces set at the correct angle. The easy stereoscopic coincidence of the two fields requires that the distance between the eyepoints of the eyepieces should be made to correspond to the interpupillary distance of the particular observer.

Practical Points

1. If there is astigmatism in the observer's eyes, it should be corrected by appropriate spectacles, or eyepiece caps.
2. The distance between eyepoints corresponding to one's interpupillary distance can be obtained with the eyepieces most in use, with the eyes close to the eyelenses. It may be measured in millimeters at each time of use, or the eyepieces may be fastened in that position once for all.
3. Both tubes should be equally illuminated if transmitted light is used.
4. Opaque illumination should be used when possible, since it rests the eyes more than transmitted light.
5. In this instrument the illumination is usually decreased with a higher power; and a brighter light is therefore required than for the unaided eye, or for the single corrected magnifying lens.
6. The instrument should be tested at regular intervals, the surfaces of prisms and objectives being examined with a lens.
7. A make of binocular is to be preferred in which the prisms and objectives can be readily cleaned.

8. The instrument should usually be inclinable for comfortable work; but, if not, it may be fastened on an inclined wooden base.

9. Differences of focus in the two eyes are best cancelled by wearing correcting glasses; differences in the two tubes can be corrected by drawing out one eyepiece slightly. The special correcting adjustment seems perhaps unnecessary, and is neglected by many users.

10. Often, correcting glasses for distance vision, in caps fitted over the eyepieces, are required with the Greenough binocular (Zeiss, Leitz). For, with converging tubes, the distance between the centers of the eyelenses of the instrument may be 5 millimeters or so less than the interpupillary distance for distant vision, because of the convergence of the eyes.

11. Reading spectacles will not usually suit the Greenough binocular (especially the lower powers), because the instrument is often made for the focus of distant vision; and with a shorter focus the fields will not coincide.

CHAPTER IV

THE MONOBJECTIVE BINOCULAR

Construction.—This important instrument may perhaps be regarded as a modification of the Abbe binocular eyepiece (10). It differs in that the main diagonal reflection which divides the light from the objective into two equal parts, occurs at a thinly silvered or platinized surface, instead of at a thin film of air (Swan cube). This metalized surface is made to reflect half and transmit half of the incident light, so that one-half goes to each eyepiece. In Jentzsch's original form, and in Siedentopf's binocular attachment, the light underwent two reflections on each side. The paths of the light in glass were, of course, equalized on the two sides.

Three essential matters regarding the monobjective binocular are: (1) the question of parallel or diverging tubes; (2) how best to arrange for the different interpupillary distances of different observers; and (3) how to allow for the necessary small adjustments of tube length required in scientific microscopy.

In the original form of monobjective binocular (Jentzsch, 1913), two reflecting prisms, separated from the central prism, are respectively attached to the two eyepiece tubes (Fig. 13). Adjustment for the interpupillary distance of the observer is made by moving the two eyepiece tubes and their attached prisms towards and away from the central compound prism. But this also increases or decreases the optical tube length which may thus be 5 millimeters wrong. In the two forms of this binocular originated by the optical firm of Zeiss, however (Figs. 14, 15), the adjustment for interpupillary distance is made by partially rotating the free prisms, without altering the

optical tube length. In the Jentzsch form, the two eyepiece tubes might work a spiral fitting when adjusting for interpupillary distance. It could perhaps be arranged that an increase or decrease of 10 millimeters from the normal (65 millimeters) would cause a depression or eleva-

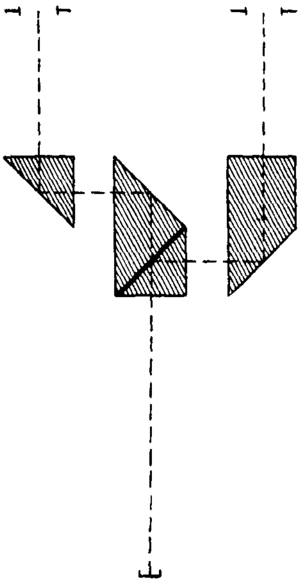

FIG. 13.

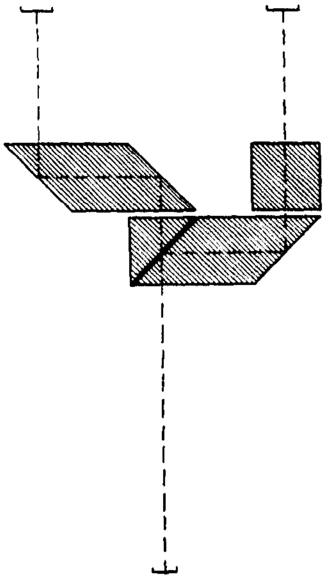

FIG. 14.

FIG. 13.—Diagram of the prisms in the original Jentzsch monobjective binocular. The double line indicates the semireflecting surface of silver or platinum. The interocular distance is altered by shifting out or in the two outer prisms, which are attached to the eyepieces. This of course increases or decreases the optical tube length. Note that there are two reflections on each side.

FIG. 14.—Diagram of arrangement of prisms to be used without altering the optical tube length. Adjustment for interocular distance can be made by rotating the left-hand prism. This is doubtless the arrangement used in Siedentopf's binocular attachment, Bitumi. Note that there are two reflections on each side. This arrangement is preferred by the writer.

tion of the eyepieces of 5 millimeters, and the optical tube-length would be unaltered.

Observers accustomed to the ordinary Greenough binocular may sometimes prefer converging tubes in the monobjective binocular also. Converging tubes may be presumed to suit best with eyes accommodated for reading

distance. But, according to Gullstrand, the normal eye looking through a microscope, is best accommodated for distant vision with the muscles relaxed. Parallel tubes appear to have the following advantages. The point of convergence for the eyes is not altered on altering the distance between the two eyepieces. The nature of the

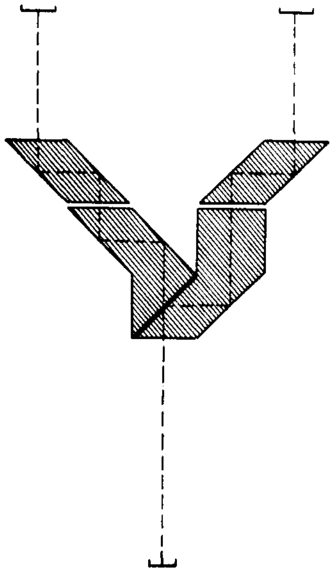

FIG. 15.—Another arrangement of prisms for the monobjective binocular. Interocular distance is altered by rotating the two upper prisms. Such adjustment does not affect the optical tube length. Note that there are four reflections on each side. This arrangement is doubtless used in the new binocular microscope of Zeiss.

vision, whether feebly or strongly stereoscopic, is not altered by slight changes in the distance of the eye from the eyepiece. The distance between the eyepoints remains the same when the eyepieces are changed for other parfocal ones with longer or shorter collars. Stereoscopic vision is possible by halving one or both of the eyepiece circles, either by special diaphragms, or by sufficiently lessening the distance between the eyepieces. Alteration of the distance between the eyepieces can be effected, in the

instruments of at least one maker, without altering the optical tube length, by the rotation of two prisms, or prism sets. Finally, the optical tube length can be increased by pulling out the eyepieces sufficiently, without altering the distance between eyepoints (thus correcting for cover-glasses below 0.17 millimeter thick); though there is in these binoculars no means of shortening the optical tube length, except by removing the nosepiece. (Hence objectives with correction collars are especially useful here.)

Stereoscopic Effect.—To obtain, with this binocular, stereoscopic vision, we can use half-discs in the eyepiece circles; or we can shorten the distance between eyepoints, so that the inner half of each eyepiece circle is cut off by the iris of that eye. In both cases, the image on the retina is deteriorated, as compared with non-stereoscopic vision, since the rays are unilateral. The effect on each eye is the same as if one semicircle of the objective aperture was cut off. The transverse aperture is, of course, halved. Hence, useful magnifications are restricted to 500 times the working aperture. When using the half-discs, it seems good to have somewhat more than a half-circle of light for the best eye; and correspondingly somewhat less than a half-circle for the other eye. However, we may also proceed, as Abbe himself recommended (10, 12), by halving only the left eyepiece circle; when a sufficiently strong stereoscopic effect for most purposes will be attained, without loss of aperture or other marked deterioration of the image, and without cutting off more than one-quarter of the light (the right eye being regarded as the usual observing eye). (This is also done in the Lihotzky binocular attachment, made by Leitz.) But these binoculars are best used at full aperture, without attempting to secure a strong stereoscopic effect; so that the comfort of observing with both eyes can be attained along with perfect resolution. There will still be a varying stereoscopic effect, arising doubtless from small lateral movements of the head. This slight stereoscopic effect may be sufficient for many purposes,

and can readily be increased by approximating the eyepieces.

The advantages of stereoscopic vision are the following: For objects nearly in one plane, which is the case with the highest magnifications, there is not much stereoscopic effect to be gained. But, with lower magnifications, the impression of solidity helps more or less in making out the true shapes and spatial arrangements of objects. Stereoscopic vision, even when exaggerated in depth by the microscope, as it always is, supplies plastic images which seem more natural than flat pictures, and appear to be more easily remembered. Such solid pictures lessen the separation between the world of the microscope and the outer world of the unaided eye. Stereoscopic vision, of course, allows dissections and other manipulations to be practiced with somewhat more facility than monocular or non-stereoscopic binocular vision. On the whole, however, a one-eyed observer through the microscope is not seriously handicapped, especially for high-power microscopy.

Non-stereoscopic Binocular Vision.—The advantages of binocular vision without strong stereoscopic effect, when the two fields of the microscope are identical, or nearly so, are as follows: The two eyes converge equally, that is, their axes are parallel; the two retinas receive equal amounts of light, and so the irises are equally contracted; the accommodation of the two eyes is the same; the floating fibers (*muscæ volitantes*) of the two eyes do not coincide in the two fields, and so are almost completely cancelled; and the loss of field caused by the blind spots of the two eyes when they enter into the field of view is also cancelled. This last may be perceptible and annoying when searching slides with the monocular microscope; especially if the slide is moved up and down (instead of from right to left), as it is when using the Detto slide bar. The natural form of vision, with two eyes instead of one, is also more comfortable; and better work can usually be done with the binocular than with the monocular.

Vhen the right distance between eyepoints is attained, there hould be left a minimum of stereoscopic effect (with arallel tubes). The attainment of this minimum can be sed as a test for the right distance between eyepieces.

The optical length of the two eyepiece tubes should, f course, be the same. If there is a slight difference in this espect between the tubes, or if the focal lengths of the wo eyepieces differ, it may be adjusted by pulling out ne eyepiece a little. But if the eyes of the observer differ, ppropriate distance spectacles should be worn; or correctng glasses should be fitted in caps over the eyepieces. he fields of the two eyepieces should be identical in size. . slight difference in this respect may be remedied by lightly moving the diaphragm in one eyepiece. In some akes of binocular, one eyepiece can be focused by a piral fitting. If this is not attended to constantly by ach user of the instrument, it is liable to be a source of rror, and may waste time. A millimeter difference in osition of the eyepieces with regard to tube length will ightly injure binocular vision with the highest objectives correct adjustment.

Binoculars with parallel tubes are usually calculated for se with a resting normal eye, or with distance spectacles.

Optical Tube Length.—Those monobjective binoculars which the eyepieces along with the prisms alter their istance from the objective along the course of light for ifferent eyepoint distances, should, it seems, for accurate ork, have some arrangement for compensating this y drawing out or pushing in both eyepieces. (Perhaps e eyepieces might be depressed enough automatically y a spiral fitting as the eyepiece tubes are moved farther part.) For all binoculars, some means of slightly shorteng the tube length is occasionally needed for accurate gh-power work. Correction for cover-glass thickness oo thin covers), with oil-immersion objectives, can be ade by pulling out the eyepieces sufficiently.

Advantages and Disadvantages.—For magnifications ver 50, or so, to about 300, the monobjective binocular

seems in some respect superior to the Greenough binocular; because its objectives are usually of higher aperture, and doubtless better corrected; and because over the whole field both halves of the objective focus equally. Its disadvantages are: that it does not give simultaneously perfect resolution and the strongest stereoscopic effect; that it cannot apparently be used at its best stereoscopically with objectives much lower than 0.3 in aperture (Carpenter, 1875); and that it cannot be used for dissection without special practice, because of the inverted picture, unless erecting prisms are incorporated (or erecting lenses, as in the Lihotzky eyepiece attachment).

Binocular Attachment.—The Siedentopf binocular attachment (now made in some form by most optical firms) with a concave achromatic amplifier between the objective and the prisms, will convert a monocular microscope into a monobjective binocular. It is equal to the binocular without amplifier. (The Bitukni slanting attachment and other oblique eyepieces allow the stage to be kept horizontal when dealing with liquids.)

It is the writer's opinion, after several years' experience with the binocular and the binocular attachment, that better work, and more work, can be done with the binocular than with the monocular microscope; even if all precautions are taken to shield the unoccupied eye in the latter case.

History.—The monobjective binocular of the modern type was, as already noted, apparently based on Abbe's binocular eyepiece (10), as modified by Ives. Jentzsch perfected his model about 1913 (76). Siedentopf has introduced improvements, especially in the mode of adjustment for interocular distance. For the literature, see especially the two papers of Abbe on binocular vision (10, 12), and Jentzsch's paper in the *Journal of the Royal Microscopical Society* for 1914.

Summary.—This binocular depends on a layer of silver or platinum which reflects half and passes half of the incident light. The instrument is best used without strong stereoscopic effect. It has otherwise most of the advan-

tages that a binocular field-glass has over a monocular one. In practice it enables microscopical observation to be carried on continuously for hours in comfort. Since the optical tube length cannot be altered much, the high dry objective, if used, should have a correction collar. A high-power water-immersion objective with a correction collar may be of advantage. A binocular attachment is made by most opticians, and by its aid most monocular microscopes can be readily changed into binoculars. In the writer's experience, this change is worth making. The monobjective binocular might well be improved for accurate microscopy by graduating the sides of the eyepieces, or by fitting them in graduated sliding tubes about 3 centimeters long; so that corrections for cover-glass thickness with oil-immersion objectives could readily be made. Of the three forms known to the writer: Jentzsch's pattern, with two reflections and slightly variable tube length; Siedentopf's model in the Bitumi attachment, with two reflections and fixed tube length; and the new model of Zeiss, with doubtless four reflections and fixed tube length; the Bitumi model would apparently be optically the best.

Practical Points

1. For stereoscopic vision with magnifications below 100, either the Greenough binocular or the monobjective binocular with halved eyepiece circles can be employed, or the erecting Lihotzky attachment may be used.

2. The microscopist should train himself to the use of parallel tubes, for they have several advantages over converging tubes.

3. For scientific microscopy, change of distance between eyepoints in Jentzsch's model of the monobjective binocular, as it slightly alters the optical tube length, should be compensated by moving the eyepieces up or down. (If they cannot be moved down, a few millimeters may be cut off each tube and replaced by a collar; for high-power work especially.)

4. There should also be some way of altering the optical tube length of all monobjective binoculars slightly, to adjust the high-power oil-immersion objectives for optimum results; unless cover-glasses 0.17 millimeter thick are always used. It is

suggested that a sliding sleeve to each eyepiece, with an extension movement of about 25 millimeters, and a retraction of 5 millimeters, might suffice.

5. The single tube should be interchangeable with the double tube, being occasionally required for short duration vision, and always for photography.

6. The Siedentopf binocular attachment is equal to the binocular without an amplifying lens.

7. When using the monobjective binocular with parallel tubes, the presence of any strong stereoscopic effect shows that the distance between the eyepieces, or the centering of the eyes, is wrong.

8. The camera lucida can be used on the monobjective binocular with parallel tubes by covering one eyepiece with a disc of ground glass.

9. There should be a screen fitted in front of the eyepieces of the binocular microscope to shade the eyes from front light.

10. With parallel tubes, distance spectacles, *not* reading glasses, should be used. For reading glasses have their centers 5 millimeters or so too near, and so cause eye strain and poor vision.

11. With the monobjective binocular with converging tubes, reading spectacles, not distance glasses, should be used. For the distance glasses have their centers about 5 millimeters farther apart than the converging eyes need for accurate centering.

CHAPTER V

THE MONOCULAR MICROSCOPE

Advantages.—Doubtless monocular microscopes will long continue to be employed, notwithstanding the deserved popularity of the binocular instruments. Although monocular microscopes have several disadvantages connected with their use, yet they possess the following advantages: The tube length, when not fixed, can be increased (by perhaps 5 centimeters), and to a less degree (about 1 centimeter) shortened, to compensate for thinner or thicker cover-glasses, or for mounting media of different refrangibilities. There is doubtless in the binocular microscope some slight loss of definition, due to the use of prisms; and though more can be seen with two eyes than with one for long periods of observation, yet for the best vision for short periods the monocular must probably be used. The monocular has physically double the brightness (*ceteris paribus*). It thus allows the use of denser color screens, which give light more nearly monochromatic. The monocular alone is suited for photography.

The Unoccupied Eye.—The monocular microscope, in the writer's opinion, is best used with a frame fitted below the eyepiece, bearing a disc of ground glass to compensate the unemployed eye (*see* Chap. I). The training of the unused eye to ignore what it sees, is, in the writer's view, a mistake. The absence of discomfort on this account seems to be one of the factors which make the monobjective binocular superior in comfort to the ordinary monocular. In fact, after practice, a microscope in which the unoccupied eye is compensated by being allowed sufficient light, but prevented from focusing on (accommodating for) any object, so that it is led to follow the other eye in this, may be, to some observers, nearly as comfortable as the binocu-

lar; and it has, in addition, the above-mentioned advantages of the monocular. A miniature electric bulb may be put on a white background below the ground glass covering the unused eye. If green light is used in the microscope, a green screen may be employed here, also. The eye in use should be well shaded from front light by a special opaque screen.

The Drawtube.—The drawtube is probably usually unnecessary in microscopes for routine work, where it seems often to be a source of error. It may be often better to change the cover-glass than to change the length of the drawtube. For accurate microscopy, as Nelson pointed out (46), there should be an appropriate diaphragm in the drawtube; as otherwise some fogging with light reflected from the sides of the tube takes place. If there is a diaphragm on the source of light, however, restricting this to the size of the source-field, much reflection does not occur. The tube of the monocular, for accurate work with high dry objectives, was sometimes fitted with a rackwork (Nelson, Coles) for easy adjustment of the tube length. This method, however, appears antiquated, and it seems better to use only cover-glasses 0.17 millimeter thick for important objects. The adjustment for cover thickness is especially important for the apochromatic objective 20, the achromatic 40 without a correction collar, and the 60 apochromatic oil-immersion objective. (In view of certain trials made by Ainslee (46), it might be worth while to test some oil-immersion objectives for the best tube length.) Of course, with objects in water, the tube length should be made somewhat longer; and with objects in "hyrax" (or other high-refractive medium) somewhat shorter, even with oil-immersion objectives. Oil-immersion objectives *must* be corrected for cover thickness, for the very best results, unless covers of 0.17 millimeter in thickness are exclusively used. In the writer's experience, the wide microscope tube has no advantage over the ordinary tube for high-power photography, if the source of light is made nearly equal to the source-field, as defined above.

Changing Eyepieces.—It is probably an advantage to have the eyepieces "sprung" into the sleeve of the draw-tube. One may have too much changing of eyepieces in the use of the microscope, as already stated. There is a maximum useful magnification, somewhere near 1,000 times the working aperture of the microscope. Anything over this is mostly useless for normal eyesight. With regard to the highest powers, it is obvious that anything under this maximum may be a loss. The low and medium powers, however, are usually employed with a less magnification than the maximum, since this procedure hides errors due to wrong centering, variation in cover-glass thickness, etc. It is not good to use so low an eyepiece that the illuminated part of the eyepiece circle nearly equals the pupil of the eye, because of fluctuations of the light with slight motions of the head, as already noted. If more brightness in the image is needed, the preferable method would appear to be to increase the used aperture of the condenser by opening its iris, instead of taking a lower eyepiece. With an uncorrected condenser, of course, low eyepieces are obligatory. With a corrected immersion condenser, however, and neutral or colored screens for lessening the intensity of the light without altering its aperture, high condenser cones and high eyepieces can be used, especially with yellow-green light. The writer, for instance, in several years' work, has not needed to use an eyepiece lower than 12.5 times (new measurement), with achromatic, fluorite, or apochromatic objectives. With low eyepieces and high objectives, the curvature of the field is usually pronounced, but this curvature is scarcely noticeable with the maximum useful magnification. It is possible to select the three or four objectives used, so that one eyepiece gives just the maximum for the highest power objective, and well below the maximum for the low or medium-power objectives. Thus the writer has used, on an achromatic microscope, objectives 13, 40 fluorite dry, 90 water immersion, and 100 fluorite oil-immersion (all with yellow-green glass), with the paired compensating

eyepieces 12.5 (7), on the Bitumi binocular attachment. For the apochromatic microscope there were employed objectives 10, 20, 60 oil of aperture 1.3 and 60 oil of aperture 1.4; all with paired eyepieces 20. This is for objects in immersion oil (or balsam). For general objects, apochromatic objectives 10, 20, 70 water immersion, and 90 oil of 1.3 aperture can be used with paired eyepieces 15. Thus little or no changing of eyepieces may be needed in ordinary high-power work.

Microscope Body.—In the writer's opinion, the microscope should be capable of being readily screwed down to the table or to a board. The instrument should be inclinable about 40 degrees from the vertical, and should rest there against a stop. If there is no stop, one can usually be improvised.

Summary.—The monocular microscope, with a ground-glass screen for the unused eye, is suited for work which only occupies an hour or two at intervals. For regular continuous work, day after day, for years, the binocular is, in the writer's experience, almost necessary. For routine work, the drawtube can well be omitted, as being a frequent source of error. By the use of the drawtube, the skilled microscopist can partially correct his low objectives for uncovered objects, and his medium or high dry objectives for slightly different thicknesses of cover-glass, etc. (Large variations in cover-glass thickness should not occur.) Hence, on the monocular with graduated drawtube, the 40 dry objective, of 0.85 aperture, can be fairly satisfactorily used without a correction collar; which is not the case on the binocular. However, the more correct the cover thickness, the less the drawtube need extend or contract. It is easier, and perhaps often better, to change objectives than eyepieces.

Practical Points

1. It has been found that with constant use of the monocular, the employment of a translucent screen over the unoccupied eye enables work to be carried on without overtiring the observer.

2. A diaphragm, about 14 millimeters across, in the drawtube, about 60 millimeters below the top, may be necessary to cut off reflections (Nelson).

3. Rackwork on the drawtube was an advantage in using high dry objectives without correction collars (Nelson, Coles). But the use of a long drawtube can be avoided by choosing proper cover-glass.

4. With an incorrect cover-glass thickness the tube length should be carefully adjusted; for, with certain oil-immersion objectives, a millimeter in error may deteriorate the image, slightly but perceptibly. With the oil-immersion objectives especially, the crispest image is only obtained with correct cover-glasses.

5. Much (or any) changing of eyepieces may be avoided. It is often better to change objectives. Too low eyepieces show curvature of the field.

6. The wide microscope tube seems only useful as allowing larger eyepieces, and hence larger fields (if these are wanted).

7. Both a diaphragm in the drawtube and a wide tube for photography are rendered unnecessary by using a source of light equal to the source-field.

8. For routine work, it seems preferable to omit the drawtube, as is now done by some optical firms, and thus avoid errors from its neglect or misuse. In this case, we may change the cover-glass instead of changing the tube length, when we find a cover-glass too thick or too thin.

9. The monocular with a drawtube is suited for the expert microscopist to correct low objectives for uncovered objects, and to correct other objectives (including oil-immersion objectives) for different thicknesses of cover-glass, or for different optical tube lengths. But, by such correction, images are not obtained quite equal to the results with the correct cover-glass thickness of 0.17 millimeter.

10. Distance spectacles, if any, should be used on the monocular microscope. For, with reading glasses, the eye would be looking through a part of the spectacle lens not the center.

CHAPTER VI

THE ROUTINE MICROSCOPE

Routine Microscopy.—In most of this book, the microscope is treated from the optical standpoint, and the utmost it can perform is demanded from the instrument. But for routine work, and also for many kinds of investigation, the possible performance of the instrument may be much beyond the demands which are made on it. In this case, it would often be a waste of time to attend to every nicety of manipulation, for the commonest optical errors (such as too low condenser aperture, slightly wrong cover-glass thickness, slightly wrong centering, and slightly wrong tube length) can usually be hidden by using a lower magnification with the same objective. Thus, a lower eyepiece is employed than would be used if the maximum useful magnification were to be aimed at. This maximum useful magnification could not, of course, be attained in this case; for the images would become dull and soft, from the optical defects, if high eyepieces were employed. Such a use of low eyepieces is, therefore, forced on the routine worker if he wants a sharp and bright image, along with uncorrected optical errors. It becomes merely a question of what grade of useful magnification suffices for the worker; or what degree of dullness, softness, or glare he may have to put up with without spoiling the image for his particular purpose.

With an eyepiece magnifying 5 times (modern notation) it is evident that the common 1.8-millimeter oil-immersion objective of 1.3 aperture (magnifying 100 times) gives an image magnified 500 times on the standard microscope. This image is usually fairly clear, if the lenses are clean, and there is no gross error. Many routine microscopists

find it sufficient. But it is only about half the capability of the objective. In order for this objective to perform its utmost, without glare or dullness, it needs a solid condenser cone of about 1.2 aperture, given by a correctly adjusted achromatic immersed condenser, or by an aplanatic chromatic condenser with yellow-green light screens. The tube length should be standard, and the source of light equal to (or less than) the source-field. The cover-glass must be 0.17 millimeter thick, or the tube length must be altered to partially correct for a thinner cover-glass (thicker ones should not be used). Then the objective should give a magnification of 1,250, the image of a well-stained object being about as sharp and bright as that given by the corresponding 10 objective.

The dry objective of about 40 initial magnification and 0.85 aperture, with a 5-times eyepiece, gives 200 total magnification; instead of the maximum useful magnification of over 800, with full light and sharp definition, given when all adjustments are correct. This reduced magnification (200 times), of the 40 objective, requires only a *minimum* condenser cone; which could even be supplied by a concave mirror, all adjustments being correct. But a nearly faultless magnification of 800 is only to be attained (cover-glasses being slightly under 0.17 millimeter thick, and other optical errors having been avoided) by a solid corrected condenser cone of 0.8, with yellow-green light.

There seems no reason, except custom, why a routine microscopist should necessarily use an instrument capable of more magnification than he requires. Objectives of lower aperture are easier to use, and cost less. With the difference in cost, an eyepiece with a higher eyepoint could perhaps be obtained. The required magnification could sometimes be got as well with a 20 objective, as with a 40 objective (as Beck and others have advised); the 20 objective not being so sensitive to slight differences of cover-glass thickness as the 40. The achromatic 20 objective has an aperture of 0.4 or 0.5, and can be used with a 10 or 15 eyepiece of high eyepoint, giving a magnification

from 200 to 300, which is what is given by a 40 objective with a 5 or 7 eyepiece. (If a 40 objective is chosen, let it be the one with 0.65, not that with 0.85, aperture, for the former is less sensitive to errors in cover-glass and tube length.) Similarly the 50 or 60 oil-immersion objective, of about 1.0 aperture, can sometimes advantageously replace the 90 or 100 objective, of 1.25 or 1.3 aperture. As several microscopists have pointed out, the 90 objective of 1.25 aperture is sometimes preferable to the 90 or 100 oil-immersion objective of 1.3 aperture. From the catalogues of three of the leading microscope manufacturers. it appears that a dry *achromatic* (or aplanatic) condenser, together with 10 and 20 dry, and 50 oil-immersion objectives, costs only about $5 more than the usual set, consisting of an *uncorrected* condenser, with dry objectives 10 and 40, and 90 (or 100) oil-immersion objective. Probably the cheapest improvement, however, of the routine microscope will come from the purchase of covers, 0.15 to 0.17 millimeter thick.

Routine Microscope.—Certain points may well be especially attended to in routine microscopes.

If daylight is used constantly, a dry achromatic condenser with lenses adjusted for plane waves will give the maximum of light. (If electric light is used an additional appropriate correcting lens should be added.) The writer has found useful a cardboard screen over the window, with a circular or elliptical aperture of variable size. This lessens glare; for the source can be made more nearly equal to the source-field. A white board in sunlight (Cobb) is worth setting up, for employment when suitable clouds fail; for a blue sky is almost unusable with high powers and color screens.

If electric light is employed, sometimes or constantly, the Corning daylight glass should be attached when colors must be distinguished; or a yellow-green gelatin film (Wratten Nos. 66, 56, or 57A) may be used, if exact distinction of colors is not required. A good lamp for constant use is a C-Mazda with bulb matt internally, of

about 100 watts and 110 volts. A large screen of thin metal should be placed before it, with a circular centered opening corresponding to the size of the source-field of the objective 10 with the most-used eyepiece; and with 25 centimeters between the lamp and the condenser. Two other diaphragms may be pivoted on, corresponding to the source-fields of the two higher objectives. The bulb of the lamp should be centered near the diaphragms. With ground glass and a lamp of 150 watts, a magnification of 1,250 can be sufficiently illuminated on the binocular, with the objective 100, of 1.3 aperture, and an achromatic water-immersed condenser.

Triple (or quadruple) nosepieces, taking in all the objectives, should be employed. Apochromatic objectives 10, and 20, as well as the 50 (or 70) achromatic oil-immersion objective, with a periplane or 15 compensating eyepiece may be best in the writer's opinion; though achromatic objectives 10, 40, and 90 (or 100) oil immersion, with a 10 Huyghenian eyepiece have been, in the past, usually recommended. The objectives should always be made concentric and the nosepiece centered by the manufacturer. The eyepieces may be compensating, no matter what the objectives, if used with yellow-green screens; and periplane (hyperplane, or planoscopic) eyepieces are also available.

The microscope tube may well be non-extensible, being fixed at the correct length. For the best work, cover-glasses 0.17 millimeter thick should be selected, at any rate for all important objects.

In working *without* cover-glasses, the (20 or) 40 objective needs a special correction, which could be supplied by the maker fitting a readily removable appropriate achromatic converging lens in the back of the objective. The 90 (or 100) oil-immersion objective usually needs an increased tube length of about 15 (or 25) millimeters when used without a cover-glass.

For counting blood corpuscles through the usual 0.4-millimeter cover, a readily detachable achromatic diverging

lens might also be supplied to make the definition perfect. The writer's experience has seemed to show that the trouble in continuous counting of corpuscles was due to optical errors caused by the thick cover.

Summary.—Often a routine worker does not need the full capacity of his objectives, and regularly uses a low eyepiece (5 times or so). But high eyepieces (of 10 or 15 times) can now be obtained with large upper lenses and comfortable eyepoints. Such eyepieces are compensating (or orthoscopic). Hence, in the case just mentioned, objectives of lower aperture can be used with as good results as are attained by cutting down high apertures, and with more comfort in their use. Thus the 40 dry objective may often be advantageously replaced by the 20, and the 90 oil-immersion objective by the 50 oil-immersion of lower aperture. A dry achromatic condenser is preferable, from every point of view, to the uncorrected "Abbe" condenser. With daylight, a large card diaphragm on the window helps to prevent glare. A convenient electric lamp is a C-Mazda of 100 watts, matt inside. Diaphragms should be placed close in front of this lamp. If the uncorrected condenser is retained, it should be used in connection with a bull's eye, or ground glass, as explained in the following chapter. It pays to pick out (or purchase) covers nearly 0.17 millimeter thick, for the best work.

Practical Points

1. Eyepieces of 10 and upwards are now made with high enough eyepoints (orthoscopic or compensating). Therefore higher eyepieces than 5 times can be regularly used with low and medium objectives; and, with a good condenser, with high objectives.

2. A dry achromatic condenser, of nearly 1.0 maximum aperture, such as is now made by several manufacturers, is, as is well known, superior enough to the uncorrected condenser, for careful microscopy, to be worth the $10 or so of extra cost.

3. The slight extra cost of an achromatic condenser is balanced by the extra performance got out of the objectives, and

by the satisfactory employment of objectives of lower aperture.

4. The 20 achromatic objective of 0.4 or 0.5 aperture (or the 20 apochromatic of 0.65 aperture), used with a good condenser, will do much of the work now done with the 40 objective, with greater ease in manipulation. The same may be said of the 50 oil-immersion of 1.0 aperture, with a good condenser; as compared with the 90 of 1.3 aperture, with an uncorrected condenser.

5. A dry achromatic condenser, properly adjusted, will give good results with an oil-immersion objective of 1.25 aperture. The maximum condenser aperture will be about four-fifths of that of the objective, and the maximum useful magnification will be about 1125.

6. A good electric lamp for routine work is a 100-watt C-Mazda, frosted on the inside.

7. Three one and three-quarter inch Wratten gelatin films, Nos. 66, 56, and 57A, can be obtained for about a dollar. They can then each be mounted in balsam between two pieces of plate glass. The optical system of the achromatic microscope is much improved by their use. Instead of having to partially correct for a long spectrum, the existing corrections of the system have to be applied only to a short piece of the spectrum, mostly yellow-green, and therefore are more efficient.

8. The use of cover-glasses 0.17 millimeter thick produces crisper images, even with oil-immersion objectives. For dry objectives, 0.15- or 0.16- millimeter covers are usually better, because of the layer of mounting medium over the object.

CHAPTER VII

ILLUMINATION

Methods of Illumination.—There are five chief methods of microscope illumination, which, when tried by Hartridge (71), yielded satisfactory results, with corrected lenses. These are: (1) focusing the original incandescent

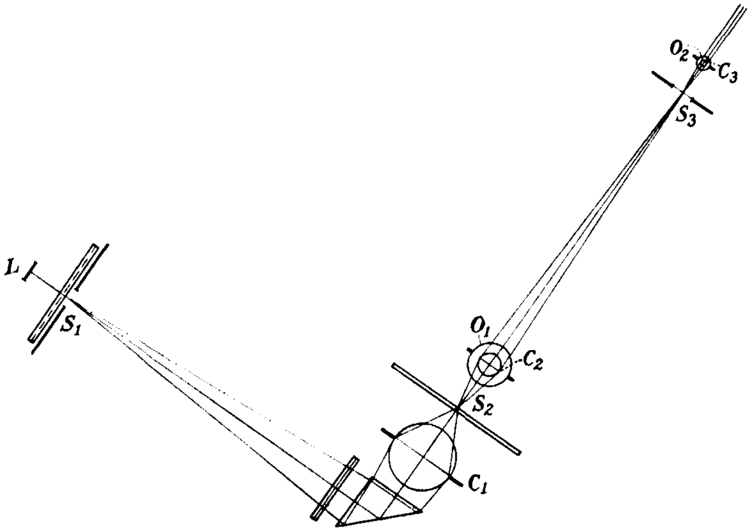

FIG. 16.—Diagram showing the aperture circles in the microscope, depending on the aperture of the objective and the used aperture of the condenser. A point on the center of the source of light (which is a ground glass circle equal to the source-field S_1, bounded by a diaphragm, and illuminated by the lamp L) sends a cone of rays through the color screen, to be reflected by the prism, and fill the opening C_1 of the condenser. This cone is condensed on the center of the object-field S_2; whence it passes to partly fill the aperture circle of the objective O_1, as the condenser aperture circle C_2. These circles are imaged and focused by the eyepiece at the eyepoint, forming the eyepiece circles O_2 and C_3, from which pencils of parallel rays pass to the eye.

source on the object; (2) using light from ground glass, which is like cloud light; (3) using a corrected bull's eye to magnify a small source, and then focusing the magnified image on the object; (4) making the rays parallel with a

corrected bull's eye and focusing them with the condenser; and, lastly (5), focusing by a corrected bull's eye the source of light in the iris of the condenser, and then focusing the bull's eye on the slide by the condenser. The first of these methods has long been expounded by Nelson; the second is preferred in practice by Hartridge and the writer (Fig. 16); the third and fourth were more or less favored by Spitta and Coles; and the fifth has been advocated by Koehler, especially for photography.

Use of Original Source of Light.—No doubt, the original incandescent source of light, properly diaphragmed to a circle of the right size, and focused by a corrected condenser on the object, gives an unexcelled illumination, with maximum intensity and aperture. For ordinary work, the image of this circle on the slide should coincide with the object-field. Under these circumstances, the objective aperture circle at the back of the objective (in the absence of strong and wide diffraction from the object) is black, outside of the illuminated aperture circle of the condenser. By shifting a series of diaphragms, in blackened card or thin metal, before the source, this adjustment for size of source of light can be made whenever an objective or eyepiece is changed. It is an important adjustment, and adds noticeably to the clearness of the image, allowing a higher aperture to be used in the condenser. The writer can do his high-power work with useful magnifications from 200 to 1,350 with a maximum diameter of 22 millimeters for the source of light, at 25 centimeters distance. Possibly, a kerosene or acetylene flame could be found in which the luminous part allowed of a diaphragm of this diameter (or less, if the lamp is closer). If so, it would seem to be an unexcelled source of light. Or the direct flame could be used only for the high powers, and a ground glass turned in for the low powers.

For optimum vision, as Nelson (101) partly foresaw, and as Beck (32) and Hartridge (71) have shown, the image of the source, as projected on the slide, must be *smaller* than the object-field. Perhaps less than one-fifth the

diameter would be best. A diatom shows sharper resolution when a small spot of light is focused on it, than when the whole field is filled with (mostly unused) illumination. This spot of light may be the direct image, cast by the condenser, of a tungsarc or point-of-light lamp; but this may be far too bright, unless used with a dense screen. Or it may be the diaphragmed image of a kerosene-lamp flame, turned edgeways, or sideways, or with doubled wick (Coles). Or it may be a short segment, properly screened, of the incandescent coil of a C-Mazda electric lamp; or the image of a 6-volt, coiled-filament or tungsten-ribbon lamp, isolated by a diaphragm. Or a small circle from a brightly illuminated double-ground plate of glass may be used with effect, as Hartridge has shown (with opal and frosted glass). But for all these there must be a corrected condenser, if the optimum illumination is to be attained. (The employment of an extra small source, however, seems unnecessary on a dark ground, where the image of the source on the slide should just coincide with the object-field.) Beck (33) has shown that reflections at cover-glass or slide surfaces cause extraneous light (glare), which fogs the image, especially with dry or water-immersion objectives. Such glare is more and more obvious the larger the source (Fig. 17). Hence it is evident that the image of the source on the slide should not be markedly larger than the object-field; that is, the source should not exceed the source-field. Also, at every lens surface there is 4 per cent or more of reflection, sometimes causing glare. Such glare, with 20 surfaces, as in a high-power binocular microscope, makes a large total. More light, from a larger source, of course gives more glare. Thus, a small circle of bright light in the object-field is the ideal for optimum resolution and definition. For most work, however, we must make the source about equal to the source-field.

In Nelson's original method (101) of using a lamp flame, there may be three improvements: first, the flame, or rather the most luminous part of it, may be diaphragmed

so that the luminous source is circular, and no more than the required size (Conrady, Beck); second, the condenser may have a fairly long focus (8.5 to 12 millimeters), so that the image of the source is large enough to fill the field of view of the medium and high powers; third, a prism may be used instead of a mirror, so that there is only one image. (For the low powers, a disc of ground glass can be turned in, in front of the flame.) A series of thin metal diaphragms may be arranged to fit close to the flame (or ground glass). For this method, the condenser is corrected for a lamp distance of about 25 centimeters. It may be convenient to fix lamp and microscope on a

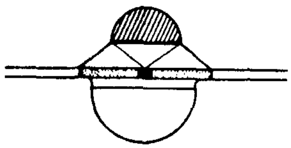

FIG. 17.—Diagram to show how glare may be produced. By the water-immersion condenser, of which the upper lens only is shown, an image of a suitably sized source of light can be thrown on the object, so as just to light up the object-field; that is, that part of the object visible through the microscope. This is shown by the black central spot. Then no extraneous light enters the objective, and there is, consequently, no glare. With a source of light, however, which gives an image in the plane of the object larger than the circle seen through the eyepiece, extraneous light enters the objective, and there is glare. This condition is shown by the dotted part of the slide.

board, since the centering of the two is important, though some latitude is allowable.

If electric light must be used, as is usual in laboratories, no ordinary electric lamp has a continuous incandescent surface large enough to fill the field of low and medium powers, or even often of the high powers. This might be done perhaps by incandescent gases, such as mercury vapor, or neon; but such lamps are apparently not manufactured in a convenient form for continuous microscope work.

Use of Ground or Matt Glass.—An efficient substitute for the flame, which can be used with the electric lamp, is a matt surface of glass to refract and diffract the light, and thus act as an original source. This is, of course,

what the clouds do to the sun's light. There is apparently no proved foundation for the old assumption that the differences of phase in adjacent points of the direct flame are of importance for microscopical vision. A disc of *finely* double-ground glass is put in front of the source of light, and is diaphragmed to fit the field of view. Flashed opal glass is said to be good (Hartridge); but, in the writer's experience, it cuts off too much light, and is brownish yellow if ground thin. The glass should be finely ground. The doubly ground glass disc may be rubbed smoothly on both sides, when warm, with a nearly saturated solution of magnesium sulphate, which is then polished off, so as only to fill the scratches. When hot, this forms an almost imperceptible powdery deposit, shutting off any direct light, and leaving only diffracted light. The fine glass powder formed by grinding two glass discs together with water and a minimum of fine carborundum flour does as well as the magnesium sulphate, if the discs are merely wiped, not washed. Two such freshly ground faces may be put together and fastened (Zeiss). (Perhaps a good matt surface could be had by using hydrofluoric acid on clean plate glass.) A C-Mazda bulb, matt inside, can be used, with diaphragms in front, even for high powers, if of about 100 watts, at 110 to 120 volts. A test for the absence of much direct light through ground glass is the putting of a condensing lens at such a distance from the source (C-Mazda lamp) that it forms an image of the source on a screen. On interposing the ground glass, every trace of an image should disappear in a uniformly diffused light. In this way, it may be roughly seen whether the ground glass needs grinding on both sides, or whether one ground surface will suffice. A single condensing lens may be placed between the lamp and the ground glass, to increase the illumination on a circle of the latter. For the high powers, a small strong condensing lens may be turned in, producing an intensely illuminated small circle at the center of the ground-glass disc. But the thin metal diaphragm before the ground glass, of such a size as to make

its image on the object equal to (or less than) the object-field of the particular combination of objective and eye-piece employed, should not be omitted; as it improves vision decidedly, especially with dry and water-immersion objectives, allowing a higher aperture to be used; and gives better contrast in photography. (An *iris* diaphragm before the ground glass sometimes gets too hot, and sticks.) The use of any sample of ground glass which can be shown to let through some direct light (that is, not diffused or diffracted) causes a loss of light; since this direct light is not concentrated at the same focus as the light diffracted by the ground glass itself, and helps to cause fogging reflections. In the writer's experience, properly ground glass before the lamp gives the best illumination available at present for general practical work with the microscope. It allows of the diaphragm being close to the (secondary) source. If the grain of the matt surface is fine, it is not noticeable with the high powers; and with the low powers it may be thrown slightly out of focus (though this is seldom necessary).

Use of a Bull's-eye Condensing Lens.—Nothing need be said about an uncorrected bull's eye, except that its use is rationally to be confined to an uncorrected condenser. There are three methods of using a corrected bull's eye. In the first method, the small light source may be magnified by a corrected bull's-eye lens, less than its focal length from the source. This method was recommended by Coles for dark field; he, however, used an *uncorrected* bull's eye, introducing spherical and chromatic aberrations. Apparently no corrected condensing lens had been calculated for this purpose. A special aspheric bull's eye has been figured for this, by Bausch and Lomb, with which an aspheric condenser should be used, and a yellow-green screen. The diaphragms must be put close in front of the source; and the condenser focuses these diaphragms on the slide, where there is thus a magnified image of the source. If the bull's eye is moved aside, the lamp may be used directly for the high powers, if set farther back.

This method has the following disadvantages: (1) it requires, for accurate work, a specially calculated bull's-eye condenser; (2) combinations of lenses balsamed together cannot well be used on account of the heat; (3) the small diaphragms cannot always be got near enough to the source of light; (4) on changing the electric bulb, a process of accurate centering and distancing of the source must be gone through; (5) the bull's eye must be fixed to the lamp, and both microscope and lamp fixed to a board, so as to keep the centering exact; (6) arrangements must be made so that the distance of the condensing lens from the microscope mirror does not change when the microscope is inclined.

Errors in lamp distance or bull's-eye distance will, in the writer's experience, lower the aperture of the condenser cone. The corrections and adjustment of the condenser have to be fitted to a fixed distance of the bull's eye from the source.

In the second method of using a bull's eye, the corrected lens is put at its focal length from the source, and the condenser focused for parallel rays. An iris is near the surface of the bull's eye. The lamp must be far enough away for the edges of the diaphragm to be fairly sharp. A good photographic objective, with its outer surface next the microscope, is the best bull's eye (Hartridge). This method also requires perfect and permanent centering of lamp, bull's eye, and microscope, which must be fixed to a board. There is a difficulty in focusing the condenser for parallel rays, since it has no diaphragm to focus on. This method has fewer disadvantages than the first way of using the bull's eye, but still requires too many adjustments.

A third method of using a bull's eye, in which an image of the source is formed in the condenser iris (or properly in the front focal plane, which is usually within the condenser), cannot, in the writer's opinion, be used advantageously with an ordinary corrected condenser; because the light passes through in a way for which no correction

has been calculated, and which therefore has a large amount of optical error.

On account of the additional liability to errors in the distancing and centering of an additional condensing lens, the writer would not as yet recommend a corrected bull's eye, separate from the microscope, for general use; and does not use one himself. Direct flame and matt glass seem to suffice for all work. An accessory achromatic lens, however, *must* be fitted to all condensers corrected for infinite lamp distance.

Illumination of Uncorrected Condenser.—With the uncorrected condenser, the diaphragms on the source require to be larger than those for the corrected condenser. That is, the image of the source on the object must be larger than the object-field, for the high powers. The resulting glare can only be lessened by cutting down the condenser aperture by its iris. The simplest methods of illumination of this condenser probably are: (1) an electric bulb (C-Mazda), matt inside, with diaphragms close to it; (2) a strongly illuminated disc of matt glass in the diaphragm carrier of the condenser (Zeiss, Hartridge); and (3) a round flask filled with blued water, for a small source (Zeiss). Of these three methods, the second is regarded as the best. The focus in the first method is to be arranged so as to get the largest continuous light circle on the back of the high-power objective (*see Watson's Microscope Record*, No. 16):

Literature.—Instructive accounts of microscopical illumination are to be found in the writings of Nelson (101), Coles (46), Hartridge (71), and Beck (32, 33). Gage (66) gives a good account of electric lamps.

Summary.—An image of the incandescent source of light thrown on the object gives unexcelled illumination. This is probably done best, at present, with the oil-lamp flame (Nelson, Coles), or the ribbon tungsten, for high powers. In the absence of this, a finely ground glass plate treated with magnesium sulphate, etc., with or without a condensing lens between it and the lamp, suffices for good work. It allows thin metal diaphragms to be

put close to it, and, consequently, the regular condenser aperture may be often increased, in the writer's experience, to nine-tenths of that of the objective (Beck). Other methods, employing corrected bull's-eye condensers in addition to the usual condensers, require the apparatus to be fixed to a board for accurate centering, and have other inconveniences and sources of error. For the two-lens uncorrected (so-called "Abbe") condenser, it is claimed (Zeiss, Hartridge) that a good method is to put a disc of ground glass in its diaphragm carrier, and illuminate this strongly.

Practical Points

1. Focus the source of light on the object with a corrected and well-adjusted condenser (Nelson).

2. Put a diaphragm on the source of light so that the illuminated circle on the slide only just fills the object-field, or is less for the best vision (Beck). A 3-millimeter diaphragm may suit a source 25 centimeters distant, for high powers.

3. For low, medium and high powers, *finely* ground glass, close to the lamp, is satisfactory.

4. For the highest resolution, the kerosene-lamp flame or the tungsten-ribbon lamp may be excellent; though they are too small for low powers.

5. The use of a bull's eye, even a corrected one, is troublesome; and may be a means of spoiling the corrections of the condenser, and lessening its aperture.

6. For uncorrected condensers, it is regarded as easiest to form an image of the source of light, by a bull's eye, close to the iris of the condenser; or to adjust an illuminated ground glass there (Hartridge, Zeiss).

7. In all cases, some means of moderating the *intensity* of the light is essential, since the iris of the condenser is to be used only for regulating the *aperture*.

8. When ground glass is used for low powers, a small thick bull's eye (hemisphere) may be turned in between the ground glass and the electric bulb, to give a small central disc of intense light for the high powers.

9. With a block of wood, a porcelain screw-down socket, some sheet zinc, and a few screws, a lamp case can be made with a movable front; allowing the centering of the pivoted diaphragms with the brightest part of the ground glass.

CHAPTER VIII

LIGHT FILTERS AND SCREENS

Plane Glass for Filters.—It is evident that to ensure the maximum concentration of light at all points of the object-field, the glasses through which the light passes must be fairly optically correct. In using color filters, additional errors need not be introduced by using coarse glass. Hence the Wratten gelatin-film light filters should be cemented in fairly good plate glass, such as C of the Eastman Kodak Company. Lantern slide covers have been recommended for this. Pieces 1¾ inch square are large enough for the usual condenser with large lenses. They can be supported in a simple holder, at right angles to the incident light, close in front of (*i.e.*, nearer the light than) the mirror (or reflecting prism) of the microscope. In cementing the gelatin films between pieces of plate glass, film and glass are cleaned with xylol and smeared with xylol balsam. Then they are pressed together. If heated much to dry the balsam, the gelatin may crumple up.

Yellow-green Light Filters.—The yellow-green Wratten series, Nos. 66, 56, 57A, 58 and 61, affords a graduated sequence of amount of absorption; and the members can be used, singly or combined, for regulating the intensity of the light. The writer has needed no other regulator. These same filters can be used for photography, with orthochromatic plates; especially if the object is stained red, as with carmine. The yellow-green filters (Nos. 66, 56, or 57A, or two of them combined) can be used constantly on the binocular microscope, during several hours each day, with restful effects on the eyes. Numbers 58 and 61 are more suited to the monocular. (A blue-green filter is preferred by some, but appears in time to tire

the eyes.) If kept in a box when not in use, these filters last, in the writer's experience, for years without fading.

Other Color Filters.—Other Wratten screens (62) of different colors, not yellow-green, are of use chiefly for short observations and for photographing colored objects with apochromatic objectives. Minus red 4, however, is preferred by Nelson for observation; and minus red 3, No. 64, is sometimes used by the writer with good effect, especially on the monocular. These are both blue-green. Number 64 plus No. 56 gives a clear green.

A slightly bluish screen (Wratten No. 78), or a special bluish glass (Corning Glass Company), gives the effects of daylight with tungsten light (artificial daylight), and is useful on colored objects not stained. Personally, the writer prefers the yellow-green light on objects stained with carmine, hæmatoxylin, brazilin, or gentian violet. Those who use white light for all work lose the special advantages of yellow-green light. However, if the eyes get tired of green, a change to artificial daylight is good.

Advantages of Yellow-green Light.—The advantages of constantly using yellow-green color filters are the following:

1. To rest the eyes. These filters (and sometimes a blue-green one) have been used continuously by the writer for this purpose, on the binocular microscope, several hours a day, for over four years, with satisfactory results.

2. To improve the corrections of the objective and condenser. It is well known that the spherical aberrations of the achromatic and fluorite objectives are corrected for the yellow to yellow-green. Hence the use of a yellow-green screen improves the *spherical* corrections by cutting out the badly corrected colors. Thus these screens strikingly improve the performance of the high-power achromatic and fluorite objectives. The yellow-green screens also improve the *color* corrections of the achromatic objectives by confining them to the middle of the spectrum. Even the apochromatic objectives are somewhat improved by the use of such yellow-green screens as Nos. 66 and 56.

(Of course none of the color screens mentioned above approximates to monochromatism; which is to be had, with maximum brightness, from the mercury lamp.) The aspheric condenser is so much improved by Wratten deep yellow-green screens, that it nearly equals the best achromatic condensers.

3. To give greater contrast; especially with objects stained with carmine, hæmatoxylin, or brazilin; and some other red and blue or brown stains. The Wratten book on photography with the microscope (61) explains how to get the maximum contrast in photography with the Wratten filters of various colors. There seems, however, little need of using filters of many colors; since it would seem more practical to stain the objects especially for photography, and to choose for this the best colors, which, with suitable yellow-green screens, come out black in prints from isochromatic plates.

4. To regulate the intensity of the light (which, of course, cannot be done with the iris diaphragm of the condenser without altering the aperture at the same time) a series of yellow-green screens suffices, the screens being used alone or in combination. They have the advantage over neutral screens in that they cut out the optically detrimental rays of light, whereas the neutral screens cut out the good with the bad rays.

5. By cutting out the red and part of the yellow, as well as the blue and violet, the visual aperture is probably increased; for the blue and violet do not seem so important visually.

6. To improve the acuity of vision by eliminating the chromatic errors of the eye itself (Hartridge).

Thus the use of yellow-green light filters is the least expensive way of improving the microscope. If the eyes should in time get tired of yellow-green, a temporary shift to blue-green or to artificial daylight is the remedy. The Wratten screens should be kept in a box when not actually in use; for continuous exposure to strong light of course slowly fades them. The Chance and the Jena glass works,

among others, now make special yellow-green glasses, which may perhaps be used in place of some of the Wratten screens.

Adjusting Intensity of Light.—The degree of intensity of the light may be altered to suit the combinations of objectives and eyepieces, by the use of screens or otherwise:

1. By using a series of yellow-green screens of increasing density as already described. The five screens here mentioned, used singly, are stated by the makers to transmit the following percentages of the incident light: No. 66, 58 per cent; No. 56, 48 per cent; No. 57A, 34 per cent; No. 58, 23 per cent; and No. 61, 18 per cent. That is, Wratten screen No. 66 passes nearly three-fifths of the light; No. 56, nearly one-half; No. 57A, one-third; No. 58, nearly one-quarter; and No. 61, nearly one-fifth.
2. By using a neutral-tinted wedge of glass, or gelatin enclosed in glass, together with a compensating wedge; a method which gives accurate gradations.
3. By using a series of neutral screens, either of tinted gelatin (Wratten), or of platinized glass (Barnard).
4. By a variable resistance on the electric lamp (Denham, 58).
5. By superposing pieces of ground glass (Beck).

Thus, if artificial daylight is used, one of the Wratten series of neutral gelatin films, or a set of similar screens, is required for maximum working aperture and maximum useful magnification.

An excellent investigation of the transmission for different colors is to be found in the pamphlet on the Wratten light filters (62).

Summary.—Yellow-green light filters rest the eyes, help much to correct objective and condenser, give greater contrast and better definition, allow regulation of light, cut out much or all red, and so decrease the wave-length of the brighter part of the light for vision; and also increase the acuity of vision in the eye itself. If yellow-green filters are not employed, Wratten daylight film, or the excellent Corning daylight glass, may be used, along with

a set of two or three neutral screens to regulate the intensity of the light.

Red-stained objects usually photograph well with yellow-green screens. High-power photographs of chromosomes stained with iron-acetocarmine can be taken with Wratten screen No. 56, using isochromatic plates.

Practical Points

1. Use fairly good plate glass for color filters, such as Wratten C glass, when a corrected condenser is employed.
2. Yellow-green light-filters may, with advantage, be used continuously on the microscope.
3. A special light bluish glass (Corning), or gelatin film (Wratten), cutting out much of the red and yellow when used with tungsten light, is excellent when it is required to view objects in their natural colors (artificial daylight).
4. Other color screens, not yellow-green, are mainly useful for the photography of colored objects with apochromatic objectives; though blue-green (or blue) screens allow of temporary vision, or of photography, at increased aperture.
5. Keeping the gelatin color filters in darkness, when not in use, prolongs their usefulness.
6. The plane surfaces of the filters should be kept fairly clean.
7. Some means of altering the intensity of the light is essential for the attainment of maximum aperture. This can be done with a series of yellow-green or neutral screens.
8. The use of yellow-green screens is the cheapest way of improving the definition and resolution of the microscope, especially the achromatic microscope.

CHAPTER IX

THE CONDENSER

Different Kinds of Condensers.—Ordinary condensers may be either dry or immersion; and each of these kinds may be uncorrected ("Abbe" condenser), or corrected for spherical aberrations only (aspheric, aplanatic), or corrected for both spherical and chromatic aberrations (achromatic, or achromatic-aplanatic). In the best-corrected condensers (achromatic-aplanatic), the sine law is so far observed that the image of the source of light is fairly good somewhat beyond the immediate neighborhood of the optic axis. In the scientific use of the microscope, the source-field (as previously defined) is, of course, changed with the different objectives and eyepieces; and the source must therefore be large enough, so that it is possible to make its image on the slide equal to the object-field (as defined in a previous chapter).

Centering the Condenser.—There are at least four ways of centering a condenser provided with centering screws or an excentric centering ring; or of testing the centering of a condenser unprovided with such devices. (*a*) The center of the top lens may be marked accurately with an ink dot, and the condenser centered by this. This may be done by making a disc of card by the aid of compasses, the size of the mounting of the top lens, and perforating its center. (*b*) If the iris diaphragm is (as is best) attached to the condenser, and is, as usual, somewhat below the anterior focal plane of the condenser, the image of the contracted iris, as seen with the low objective, may be used for centering. This is the common method. (*c*) If the back of the objective is observed through a small centered opening at the top of the microscope tube, such as a card disc with a rim and a small central hole, the light

circle of the condenser may be centered within the aperture circle of the objective. If the eyepiece circle is magnified by a lens centered over it magnifying 10 or 15 times, the above centering is easier (Beck). (A 15-times compensating eyepiece put above will sometimes serve.) (*d*) If the image of the diaphragm in front of the source of light has been centered by a correctly centered bright-field condenser, a dark-field condenser may then be centered in the same sleeve by this image of the light.

The condenser should be centered accurately to the high oil-immersion objective. This can be done by centering the image of a 3-millimeter source diaphragm and a small object, with the high oil-immersion objective in question. The low-power objective is then turned on, without disturbing light or object. The image of the contracted condenser iris, seen by racking up the low objective, is then made concentric, by the centering collar of the condenser, with the images of the small diaphragm and the object, which have themselves been made concentric with the high oil-immersion objective. If there is no large centering collar to the condenser, which is in a loose sleeve with a tightener (like those of Zeiss) there may be screws serving to give a certain amount of adjustment, or the centering can even be adjusted by a piece of paper of the proper thickness gummed in the right place on the side of the condenser.

It seems best for a centering collar to be small, and either adjusted by eccentric rotation (Zeiss) or by small screws turned by a screwdriver or a watch key. These are less likely to get out of adjustment, when once set, than the large collars with large screw heads.

The optical part of the condenser, the condenser iris, and the additional achromatic lens (when present) must all be concentric with the high objective, or much light is lost, and the image is abnormal.

The Uncorrected Condenser.—The uncorrected condenser, commonly called in English the Abbe condenser, was described by Abbe in 1873. (His firm have made three

corrected condensers since for ordinary work; one, at least, of which seems to have been calculated by Abbe himself.) This uncorrected condenser was no doubt an improvement on the concave mirror. Doubtless, Abbe's name attached to it has caused this condenser to be more employed. It was originally meant for use with a large source of distant light, namely a white cloud. Its whole aperture was not intended to be utilized, but only a direct or oblique cone of light of about 0.3 aperture. The possibility of obtaining cones of greater obliquity than could be given by the concave mirror was its chief advantage. It was made to be used as a water-immersion condenser, when employed with oblique beams with high powers; but it is now fitted on most routine microscopes, for a direct, not an oblique beam, and to be used dry. In biological work the use of oblique beams is by no means an everyday procedure; nor is it to be recommended, having been replaced either by full cones or by dark-field condensers. Objectives have been improved since 1873, and so have condensers. Hence it is, in the writer's opinion, unwise to retain, on high-power microscopes, the uncorrected condenser, and the rackwork for oblique illumination. (Allowance must, of course, be made for the conservativism of the public and the manufacturer.)

Koch used the uncorrected condenser with full aperture to veil the reflections and refractions in the object by the resulting glare; thus leaving the colors of the well-stained bacteria conspicuous on the luminous background. This method may, of course, be employed with any condenser of large aperture, for in this way, the parts of the object visible by differences of reflection or diffraction are illuminated by light outside the aperture of the objective, as if on a dark field. So they are whitened and disappear in the light fog, leaving the color of the interior alone conspicuous. This phenomenon is visible, as is well known, in a low-power objective of, for example, 0.3 aperture, if a larger aperture than 0.3 is used in the condenser; or if, with a condenser aperture somewhat less than 0.3,

some adjustment is wrong so as to cause glare. With high powers there is often glare before a nine-tenths cone is reached, unless due care is taken. Details are of course lost by the use of this glare method. A source of light larger than the source-field gives somewhat similar results. In the writer's opinion, a 9/10 cone, with all adjustments correct, gives a better view of the colors of the bacteria, together with all details. In fact, in Koch's time (about 1878) the usual condenser cone was often not over 0.3; which, with the oil-immersion objective of over 1.0 aperture just introduced by Abbe, would cause dark lines due to differences of refraction, which would more or less hide the colors of stained objects. Thus Koch's use of a large cone on stained objects was an advance in microscopy at the time.

In the writer's opinion, the uncorrected condenser has no merit over the corrected condenser, except a small difference in price; and it has a number of demerits.

The disadvantages of employing the uncorrected condenser are as follows:

1. The nominal aperture of 1.2 or 1.4 only applies to the extreme rays of this condenser when used as an oil immersion, and the aperture is much less when the central rays are focused. The condenser cannot be used with a small diaphragm on the source without a large reduction in aperture.

2. Its focal length varies, being shorter for green than for red; and much shorter for the marginal than for the central rays. Hence, unless carefully adjusted, the wrong zone or color may be focused, and thus the aperture further reduced (Fig. 18).

3. At its maximum, with a small source, the central aperture, properly focused, is said (Carpenter-Dallinger) to approximate, for the three-lens form, 0.5. The writer's measurements make it less than this for a specimen of the two-lens form. Thus, an oil-immersion objective of 1.4 aperture, with an uncorrected but properly adjusted condenser, used with a 3-millimeter source of light so as to

prevent glare, would have a maximum working aperture of perhaps 0.85 or 0.95. But with the same objective and a corrected and properly adjusted condenser, a working aperture of over 1.3 is achievable. With a large source of light, the condenser aperture may be greater than 0.5 with the uncorrected condenser; but only one zone is in focus at a time, and there is glare.

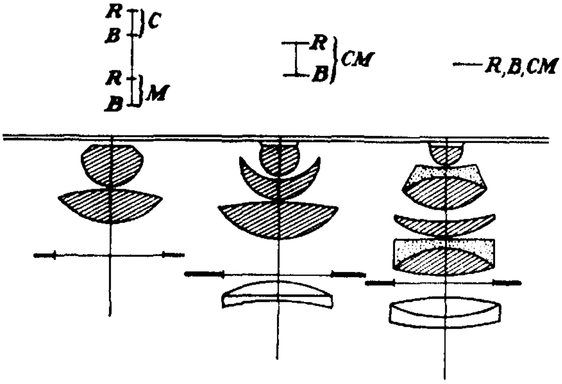

FIG. 18.—Sectional diagrams of three condensers. On the left is a dry, uncorrected condenser. Above this is indicated roughly how the axial focus differs for the center C and margin M of the condenser cone and for the different colors R, B. In the center is a diagram of an immersion aplanatic condenser corrected for yellow-green light by an aspheric surface on the lowest lens. An accessory achromatic meniscus lens is seen below, which corrects the condenser (made for parallel rays) for a near lamp and for water-immersion with a 1-millimeter slide. Above is indicated that the lens gives a sharp focus beyond the axis for one color, but has different focuses for different colors. On the right, is an aplanatic achromatic condenser adjusted for water immersion and near lamp by an additional achromatic lens below its diaphragm. Above is indicated that there is one focus for the different colors and for the different zones.

4. The uncorrected condenser with a center stop does not give a sufficiently bright nor a sufficiently achromatic dark-ground illumination. Hence special dark-ground condensers are needed, in addition, even for medium powers.

It seems obvious that the uncorrected condenser should not be employed in the scientific use of the microscope. It may be used for routine work, as Hartridge explained (71), with an image of a large source of light thrown by a bull's-eye lens near its front focal plane, so as to send nearly plane waves through the object from all sides

(Koehler's method). This can also be done, as already stated, by putting a well-illuminated disc of ground glass in the diaphragm carrier (Zeiss, Hartridge).

The Aspheric (Aplanatic) Condenser.—An improvement in the uncorrected three-lens immersion condenser has been effected by grinding (figuring) one surface of the lower lens approximately to the aspheric curve found empirically to correct the spherical aberrations of the three lenses for yellow-green light, so that all zones of the condenser, when tested, are seen to focus accurately together. Such a condenser is now made by two or more firms (Fig. 18). It gives somewhat more light, in the writer's experience, than the corresponding achromatic condenser, when used with a deep yellow-green filter; and, with a small source, has an aperture, when corrected and oil immersed, of over 1.3, which is as high as is needed. It can be used advantageously with fairly deep green screens, such as Wratten Nos. 57A and 58; and, doubtless, with monochromatic light, such as the mercury-vapor lamp screened for all but the bright-green line. Used with the Wratten filters Nos. 66 or 56, the focus of the green is of course shorter than that of the small amount of red also transmitted; and this causes the image of the source at the focus of the green to be surrounded by a fringe of red. This condenser, corrected for use with lamp at 25 centimeters (and also as a water-immersion) by centering an appropriate achromatic meniscus below it, is, in the writer's opinion, when used on difficult objects, nearly equal to the achromatic-aplanatic condenser; both being used with a rather dense yellow-green screen, such as Wratten No. 58. It allows of good results even with apochromatic objectives; and, with a deep-green screen, is about as good as is required for high-power work with achromatic objectives. It should, however, be corrected by the makers for a lamp at 25 centimeters, and for water immersion.

The Achromatic and Achromatic-aplanatic Condensers. An achromatic condenser may be corrected only for rays indefinitely close to the optical axis (paraxial rays).

A condenser corrected for rays away from the axis, according to the sine law, can alone be called truly aplanatic (Abbe). Hence the best condensers are achromatic-aplanatic (Fig. 18). Of course, no useful condenser can be as well corrected as an objective (Nelson), and none needs to be. A well-corrected condenser can only give the best results if all the surfaces between the source of light and the object are corrected to correspond. These adjustments include the distance of the source of light, the parallel-plane condition of the yellow-green or other light filter, the correctness of the plane mirror or reflecting prism, the thickness of the slide, and the nature of the immersion fluid below the slide.

Dry and Immersion Condensers.—It is usually found, in the writer's experience, that the use of cedar oil on an immersion condenser is abandoned after some days, weeks, or months of constant use; because of its soiling the slides, the stage, and the condenser. If the immersion condenser is henceforward used dry, it would have been better to have procured a dry condenser at first. Even Coles (46) mostly used a dry condenser; though, of course, aware of the superior advantages of an immersion one. A dry achromatic condenser is susceptible to different thicknesses of slides; but if slides are used of the same thickness, preferably perhaps 1 millimeter, and the condenser is corrected to this thickness and to the distance of the lamp (if it is originally corrected for plane waves) by adding a corrected converging lens in front, then a good achromatic dry condenser may give an aperture of 0.8 to nearly 1.0 for the center of the field. It must not be forgotten that Abbe himself long ago calculated an *achromatic* condenser (15). The writer has used a dry Abbe *achromatic* condenser with large lenses, corrected for a near lamp, for years; and it permits of the use of fairly small sources of light. A dry achromatic condenser, corrected for a near lamp, and used with uniform slides, is the form which might well, in the writer's opinion, be used wherever possible for the routine work of a laboratory where oil-immersion

objectives are employed. The focus need not be altered for different slides, in ordinary work, if only 1.0-millimeter slides are used. For high-power research, water-immersion (or oil-immersion) condensers should, it seems, nearly always be used. It was the custom, when daylight was the popular source of light, to correct condensers for parallel rays (plane waves). This is now unnecessary; for since electric lamps are used for all high-power work, such condensers have to be corrected again by an additional achromatic lens below, which would not be needed if they were made for a lamp at 25 centimeters. Also even dry condensers are often, it seems, corrected for a thick slide, instead of for a slide between 0.9 and 1.1 millimeters. It would be a boon if some optical firm would make a condenser (achromatic and aplanatic), of 1.25 true aperture with a 3-millimeter source of light, water-immersion, with lower lens about 30 millimeters across; and corrected for a lamp at about 25 centimeters, and for slides 1.0 millimeter thick. The upper surface of the upper lens might well be concave, and so help to hold the water when the microscope is slanted (as well as improve the correction).

In the writer's experience, the upper lens of a water-immersion condenser, as well as the lower surface of the slides, has to be regularly cleaned with xylol, since traces of immersion oil get on them and diminish the light perceptibly.

Testing the Adjustment of the Condenser.—There are three ready methods of testing the condenser as to its adjustment and aperture. Some such tests are imperative if the best images are to be formed. A condenser out of adjustment gives a lower aperture, which is especially noticeable with a small source of light.

1. The source of light being properly diaphragmed, various objectives of known aperture are focused on an object, the object being in water if a water-immersion objective is used, and in (balsam or) immersion oil for an oil-immersion objective. The diaphragm on the source of light is made of such a size as to give on the slide a focused image

which is equal to or somewhat less than the object-field. The back of the objective is then observed through a small circular opening centered in a cap over the top of the microscope tube, the eyepiece being removed; or by a 15-times magnifying lens centered over the eyepiece. The solid light circle on the back of the objective, when set at its maximum by focusing the condenser, represents by its

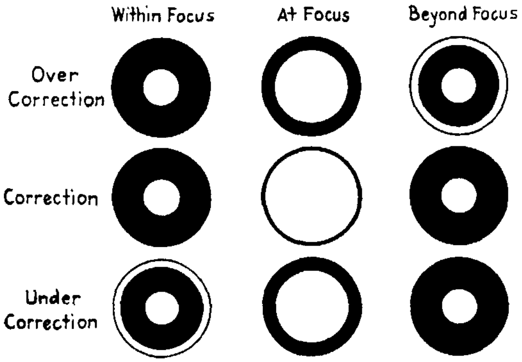

FIG. 19.—Diagram of the back of a high-power, oil-immersion objective used with an aplanatic achromatic condenser corrected for water immersion. In the upper row, the slide is too thick, or the lamp is too far away. On raising the condenser, the disc of light merely gets smaller; but on lowering the condenser, a marginal ring of light appears. When the condenser is focused, its aperture is seen to be lessened. In the middle line with adjustments correct no marginal ring appears, whether the condenser is raised or lowered. The aperture is at a maximum at the focus. In the lower line are shown the effects of too thin a slide or too close proximity to the lamp. Here, on raising the condenser, an outer ring appears, which is not the case on lowering it. The aperture at the focus is also found to be lessened. This is the ring test.

radius the used aperture of the condenser as compared with the radius of the back lens, which represents the aperture of the objective. (The condenser should have been centered, if necessary.) Thus the maximum condenser aperture can be found.

2. The edges of the image of the small diaphragm on the source of light are observed when focused, along with the object, by different objectives at different condenser apertures. The focus of the condenser should not require to be changed much, for the different apertures. If it does, there is spherical aberration.

3. With a small diaphragm on the source of light, the condenser is moved up and down, while the back of the objective is observed; a high-power oil-immersion objective being used, and a nine-tenths condenser cone. If a marginal ring of light comes by moving the condenser up, the condenser is undercorrected; and, which does not so often happen, if the marginal ring is focused by moving the condenser down, it is overcorrected. (In some condensers only one zone out of three is correct. These are usually adjusted for the middle zone.) A well-corrected and well-adjusted condenser shows no marginal ring (Fig. 19). This is probably the best method of testing a good condenser rapidly.

Use of the Condenser.—The employment of the condenser comprises: (1) adjusting, (2) focusing, (3) regulating the upper limit of the aperture by the iris diaphragm, and (4) when used for dark field, regulating the lower limit of the aperture by the size of the central stop. The adjusting of a condenser includes: (1) the adjustment of the distance of the lamp; (2) the addition of an achromatic converging doublet, or unscrewing of the top lens or lenses, to change from parallel to diverging incident rays, or to change from oil immersion to water immersion; and (3) adjusting for thickness of slide. The different adjustments are given in the adjoined table. They can all be made, once for all; if uniform slides, 1.0 millimeter thick, are regularly used.

Causes of Overcorrection	Causes of Undercorrection
1. Moving the lamp farther away.	Moving the lamp nearer.
2. Adding a converging lens close below the condenser iris.	Adding a diverging lens close below the condenser iris.
3. Unscrewing the top lens.	Moving the lenses closer (if possible).
4. Making immersion fluid of condenser more refractive.	Using a less refractive immersion fluid.
5. Increasing the thickness of slide.	Decreasing the slide thickness.

Thus the condenser can be adjusted and tested, by the ring test mentioned above, until it gives the highest solid aperture with a small (3-millimeter) source of light.

For correcting a condenser, made for daylight, for distance of lamp (and, at the same time, for water immersion instead of oil), we may use the lenses made by one maker to change field-glasses into telescopic magnifiers, if of correct focal length. These range up to 30 millimeters across, which seems large enough for any condenser. They can be centered in the diaphragm carrier, below the condenser; or half of a photographic (rapid rectilinear) objective of correct focus, or a large doublet achromatic magnifier may be employed. If the condenser is primarily adjusted to plane waves, as is the aplanatic-achromatic condenser of one or more makers, the focal length of the additional lens should be equal to the lamp distance, with oil immersion of the condenser; and should be less than this (depending on slide thickness) if water immersion of the condenser is to be used instead of oil immersion. With a slide thickness of 1.0 millimeter, the writer finds an additional achromatic converging lens of about 13-centimeter focus will work well, for a condenser of 8.5-millimeter focal length. The ring test will show which side of the additional lens should be put in front, and what lamp distance is best.

The Aperture Circle of the Condenser.—The distribution of light on the back of the focused objective is worth examining regularly when using a condenser. The same distribution can be seen in the circles over the eyepiece, when magnified 10 or more times by a hand lens, or by a compensating eyepiece of 15 magnification.

When a properly adjusted condenser is focused on the object, with a small source of light, there is seen on the back of the high-power objective, as already stated, a circle of uniform light, equal to the used aperture of the condenser (Fig. 19). This circle may be cut down to any extent by the iris of the condenser. If the condenser is now raised, some of this light may go to the margin (because of undercorrection of spherical aberration), when only a small disc will remain in the center, with a dark ring between. In this focus of the condenser, the middle zone of the

objective would not be fully utilized, which would cause defects in the resulting image. On the other hand, if the condenser is lowered below its correct focus, its aperture is again seen to decrease rapidly (and there may be an outer ring due to overcorrection). Hence the condenser must be fairly accurately focused, in order to give its greatest solid aperture. Some degree of undercorrection of the condenser is often found, due usually to wrong adjustment; and sometimes to correction by the maker for a distant source of light. In this case, the focus of the condenser for the image of the source on the slide, with the 16-millimeter objective in use, is longer than when the condenser iris is opened out, and the 2-millimeter oil-immersion objective employed. So that, after focusing the source of light with the low-power objective, the condenser has often to be raised still more to focus the source for the high-power objective.

If an uncorrected condenser is used with a small source of light, it will be found that it cannot be focused for the whole aperture at once; for the focal planes of all zones are different, so that it can only be focused for one thin zone at a time. And within one zone it can only be focused for one color. Hence a large source of light must be used to fill more or less of the vacant zones. For, with a small source of light, the image of the source on the slide is spread out by the uncorrected condenser, and so loses intensity and aperture.

With a condenser corrected for spherical aberrations only, the different colors have, of course, different focal planes. Thus, as already stated, the disc of light on the object (from the diaphragm on the source of light) shows a thin, reddish margin (with not too dense a yellow-green screen, such as No. 66) when the condenser is focused for green. This margin changes to bluish-green when the condenser is lowered, and the yellow and red come into focus. Screens Nos. 66 and 56, as already noted, let through a little red. The out-of-focus color circle is, of course, more spread out than the color in focus. Hence,

an aplanatic condenser not corrected for color, with no color screen, or with the less dense yellow-green screens Nos. 66 and 56, or with daylight glass, has to be carefully focused for yellow or yellow-green; which special focusing is not needed if an achromatic condenser is used, or if a dark green screen like Wratten No. 58 is employed.

Regulation of the Iris of the Condenser.—On the regulation of the iris of the condenser depends much of the performance of the objective. It is, as already stated, assumed that the effective aperture of the microscope is equal to half the sum of the whole aperture of the objective and the used aperture of the condenser (as shown on the back of the objective with a small source of light). With

FIG. 20.—Diagrams of the back of an objective with a condenser cone of one-fourth, one-half, four-fifths, and nine-tenths of the aperture of the objective in question.

a small light-source, and a well-adjusted objective and condenser (that is, adjusted for tube length, thickness of cover and slide, etc.), a cone of light of nearly the full aperture of the high-power objective (say, nine-tenths) can be regularly employed on well-stained objects, in appropriate media. At any rate, more than Nelson's four-fifths aperture cone (101) can be used, as Beck has shown (33). Hence, the condenser should be capable of giving nine-tenths of the aperture of the highest objective (see Fig. 20). It need not be capable of more, if not used for dark field.

If the iris of the condenser is opened to give a greater aperture than that of an objective of lower aperture, there occurs the flooding of details with a glare which eliminates many of them. For the extra aperture of the condenser lets in marginal rays, which give dark-ground illumination, as usual; and the result is that black lines

are whitened, etc. On the other hand, if the aperture of the condenser is smaller than about four-fifths of the aperture of the objective, with a small light-source; then there is marked loss of light, definition, resolution, and brilliancy.

It may be well, as is sometimes done, to have an arbitrary scale arranged by the side of the iris of the condenser. The values of this scale may be obtained by equalizing the aperture of the condenser to that of standard objectives, all adjustments being standardized. Such a scale should be legible from the side of the condenser.

Dark-field Condensers.—A corrected immersion condenser of long focus and 1.3 aperture, such as those made by some prominent optical firms (with an additional achromatic lens to correct for lamp distance, etc.), gives a dark field, when a central stop is placed near the front focal plane (as already stated). An expanding central stop is best (Coles). Such a dark field is preferable, according to Coles, for searching for spirochætes with an 8-millimeter apochromatic objective on a dry smear preparation. This combination gives also excellent pictures of living bacteria, up to a magnification of about 600. The required magnification can be fairly attained with the apochromatic objective 20, and a pair of 15 eyepieces on the Siedentopf binocular attachment; the eyepieces here magnifying over 25 times. The coil or ribbon of a 6-volt, 108-watt lamp is to be focused directly on the object, using deep-green screens if necessary. Yellow-green screens are as useful with the dark ground as with the bright ground. The cover-glass should be accurately 0.16 to 0.17 millimeter thick, and should be parallel to the slide. The layer between cover and slide should not be more than 10 microns thick. The star test may be used to show that cover-glass thickness and tube length are correct. Then almost faultless images will be obtained. This form of dark field gives the maximum of light (Metz, 97). In the writer's experience, an appropriate central stop can be arranged for the objective aperture of 0.85, on the aplanatic

achromatic condenser of 1.3 aperture. Thus an oil-immersion objective of that aperture can be used for dark field. Water immersion is most convenient for this condenser. Such a condenser is superior to the special reflecting condensers, in that it is already centered; it can be used through a greater range of slide thicknesses; the change from bright field to dark field is made immediately by inserting the stop; and this condenser concentrates more light on the object than do the special reflecting condensers, all of which have a smaller range of aperture.

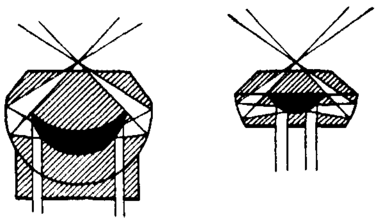

FIG. 21.—Sectional views of the cardioid (Zeiss) and bicentric (Leitz) condensers. Note that the light is totally reflected, first at a convex, and secondly at a concave surface. The black part represents an air space.

The bicentric condenser, the cardioid condenser (Fig. 21), and similar double-reflecting condensers made by all optical firms, give an excellent dark field up to objective apertures of 0.85 (paraboloid), 1.05 or higher (cardioid), and 1.15 or more (bicentric). They are used mainly on objects in watery media, and are all water or oil immersed. The condensers with large lenses are to be preferred to those with small lenses, for the former do not require such exact centering. These dark-field condensers demand, however, a special slide thickness; and give the best results only with special oil-immersion objectives, usually of about 60 or more magnification, and 0.85 to 1.15 aperture. (Doubtless water-immersion objectives could be used advantageously.) For apertures of 0.85 to 0.95 an oil-immersion objective is preferable to a dry objective, because there are less errors from wrong cover-glass thickness, and more light. Such double-reflecting condensers are used in searching for delicate spirochætes. Coles, however, has shown that such

searching can be done well with a corrected immersion bright-field condenser with center stop (45). Filter-passing organisms, flagella on living bacteria, and cilia on diatoms have been demonstrated with these special condensers, which are excellently fitted to show up living bacteria in thin layers of water. A special chamber is useful, with a slide of the proper thickness, having an island so arranged as to hold a definite thickness of liquid (less than 10 microns deep) when the cover-glass is pressed down. In the writer's experience, these condensers can be conveniently centered by first centering a small diaphragm on the source of light by means of the bright-field condenser. Then this spot of light is used to center the dark-field condenser, which has been put in the place of the bright-field condenser, neither mirror nor microscope being moved. A piece of lens paper may be mounted in balsam on a special slide, and used as a screen to catch the image of the source. Since these special dark-field condensers are reflecting (not refracting), they are achromatic. They are also nearly free from spherical aberration.

The lower limit of aperture of certain specially made double-reflecting condensers has been increased until it exceeds that of the oil-immersion objectives of 1.3 aperture. Such condensers (Cassegrain and Leuchtbild) are useful for viewing small objects mounted in balsam or in immersion oil. These condensers must be oil immersed. They require accurate centering, and close attention to the appropriate thickness of the slide and the position of the light. When everything is right, they give remarkably good pictures of lightly stained bacteria in balsam or immersion oil. The color of such bacteria is complementary to that of the stain, when white light is used. Thus bacteria stained with gentian violet appear golden-yellow, while those stained with fuchsin show greenish. This is due to the complementary color, to which the dye is opaque, being diffracted (Berek, 38). A 6-volt, 108-watt lamp, with coil or ribbon filament, may well be used with these condensers; the incandescent filament itself being focused

on the slide, without ground glass. When the bright field condenser is used first to center the light, dense screens (or ground glass) must usually be interposed.

The dark-field condenser is well worth using in many cases, since it usually gives full resolution, equal to a full well-corrected condenser cone with the bright field; rests the eye; brings out slight differences of refraction (as in living bacteria); gives good pictures of lightly stained objects; and shows up any errors of adjustment of the objective or of the tube length conspicuously. Its chief disadvantages are that it cannot well be used for objects in layers of water thicker than a few microns; that it takes time to adjust; that it does not show true colors; and that it is useful chiefly for submicroscopic, or nearly submicroscopic, isolated objects.

Summary.—There are four usual kinds of bright-field condensers:

1. The two-lens uncorrected condenser, used dry, with a large source, or with a disc of ground glass close below the condenser iris. This condenser causes loss of aperture, and allows glare.

2. The achromatic condenser, for use dry, corrected for a slide 1.0 millimeter thick and for a lamp distance of 25 centimeters. The aperture should be nearly 1.0, with about 12 millimeters focal length. This condenser is good for the routine microscope.

3. The aplanatic aspheric condenser is also to be adjusted for a slide of 1.0 millimeter and a lamp distance of 25 centimeters; but should be corrected for water immersion, and used only with yellow-green glass. This condenser is suitable for achromatic objectives. Its aperture is about 1.3.

4. The achromatic aplanatic condenser, adjusted as No. 3, and also used as water immersion, is of about 1.3 aperture. This condenser may well be used with fluorite and apochromatic objectives. It gives somewhat better results than No. 3, especially with white or light yellow-green illumination, and is easier to focus correctly, since the colors focus together.

Condensers made for infinite lamp distance, or for oil immersion, or for both, when used as water immersion with a near lamp are much undercorrected spherically. They may be corrected for this, as already stated, by adding a corrected converging lens below, or (partially) by separating the lenses. A condenser with correction and adjustment will give (*a*) about equal apertures with a large (25-millimeter) or a small (3-millimeter) source; (*b*) nearly the same focus of the diaphragm on the source with the 16-millimeter and the 2-millimeter objectives; and (*c*), with a 3-millimeter diaphragm on the source, and full aperture, no outer ring on the back of the high-aperture objective, either within or without the focus of the condenser.

A good dark field for objective apertures up to 0.85 can be obtained by centrally diaphragming the aplanatic achromatic water-immersion bright-field condenser. A dark field for objects in water and objectives up to 1.05 (or even 1.2) aperture can be had by using the cardioid, or bicentric, or other similar reflecting condenser. The Cassegrain and Leuchtbild (luminous spot-ring) reflecting condensers will give a good dark field for objects in immersion oil or balsam, with objectives of apertures up to 1.3. The dark field yields results equal to those of the bright field with all adjustments correct. The dark field is better for submicroscopic objects. Oil-immersion objectives for dark field are best when made to be used at their full aperture. Hence the special oil-immersion objectives with lower aperture are necessary.

Practical Points

1. A corrected condenser should be used for standard microscope work, because with an uncorrected condenser the source cannot be diaphragmed to get rid of glare without simultaneously decreasing the aperture.

2. An aspheric-aplanatic condenser is considerably better than an uncorrected one, but must be used with a yellow-green screen, because each color has a different focus.

3. An achromatic-aplanatic condenser, of aperture 1.3, water immersed, is doubtless best for high-power work; especially

with apochromatic or fluorite objectives, and a "daylight" screen.

4. It is, in the writer's experience, advantageous to correct the high-power condenser for water immersion, and always to use it immersed.

5. A dry achromatic condenser is good for routine work.

6. The corrected condenser should be adjusted, by the maker or the user, for the distance of the lamp, and for the thickness of the slides regularly used.

7. The corrected condenser should be accurately focused on the object for high powers, and approximately for low powers.

8. The aperture of the condenser must be carefully regulated (for best vision), regardless of the light intensity, which is to be adjusted by suitable screens.

9. An aplanatic-achromatic immersion condenser, with center stops, gives a good dark field with the 20 apochromatic objective of 0.65 aperture, or with the dry or oil-immersion objectives of 0.85 aperture.

10. For objective apertures between 0.85 and 1.05 (or even higher), the bicentric or the cardioid condensers show objects in water well, with the special oil-immersion objectives.

11. For stained smears of bacteria or spirochætes, or other fine particles, mounted in balsam or immersion oil, the Cassegrain or the Leuchtbild condenser will give good pictures with objectives of 1.3 aperture.

12. With high objectives, the use of the uncorrected condenser usually entails the use of 5-times eyepieces. With a corrected and adjusted dry condenser, giving 0.9 true aperture, the 10-times eyepieces may well be regularly employed, and the 5-times not used. This is with the usual achromatic objectives of 2 or 1.8 millimeters focal length. With apochromatic or fluorite objectives of 3 or 2.5 millimeters focal length, 15- or 20-times eyepieces may be regularly employed, and the 10-times eyepieces not used; there being a corrected and adjusted water-immersion condenser, giving 1.25 true aperture.

13. If the condenser is not centered with the objective and eyepiece, the margin of the 3-millimeter diaphragm will not seem uniformly sharp all around, nor uniformly colored when out of focus.

CHAPTER X

THE OBJECT

Stained Objects in Balsam, or Immersion Oil.—Many or most of the objects usually examined have been fixed, stained, and permeated with a medium of higher refraction, such as Canada balsam in xylol, or immersion oil (as in most smears of bacteria, and blood corpuscles). The fixing and staining are, of course, necessary, and the artificial colors show better in balsam or cedar oil, since the differences of refraction are lessened or even annulled. But too exclusive a dependence need not be placed on observances of color differences, to the exclusion of refractive differences, especially when the stain is not differential. The excellent modern water-immersion objectives should not be neglected. For by a water-immersion objective alone can perfect views be readily obtained of the fine structure of plant or animal preparations in serum, sap, or any watery medium, that is, in their natural state, if they are of a certain depth, about 0.01 millimeter or more, beyond which high-power oil-immersion objectives give fogged images. Differential staining in one or two colors, however, has been the chief help in some branches of microscopical work.

Objects in Watery Media.—The use of stained specimens, smears, or sections, in balsam or immersion oil, should probably be regarded as supplementing, or being supplemented by, the study of living or fixed objects in water, serum, sugar solution, acetic acid, or similar liquid of low refrangibility. In specimens of chromosomes fixed in 45 per cent acetic acid, and simultaneously stained with iron carmine, the contours are sharply defined; whereas, in stained chromosomes (or bacteria) in balsam or immersion oil, the contours are usually indicated wholly, or almost wholly, by the cessation of stain. Hence, it is well to study

preparations, if possible, dry or in water, as well as in a medium homogeneous with glass.

Limit of Resolution.—An objective of a given aperture, with a given cone of light from the condenser, has a limit of separating (resolving) power, for markings, edges or particles, at a certain distance apart. Below this limit of separation the markings appear to run into one. This limit of resolution has been calculated for a full cone of perfectly focused light of a definite color, when the working aperture is equal to the actual aperture of the objective; which may be nearly (if not quite) the case with high powers correctly adjusted. This limit is the distance at which two neighboring points are just distinct, and do not appear as one. All particles smaller than this appear spread out to about this size; and if black they look grey; the lighter, the smaller they are; till below a certain size, even black particles are indistinguishable from the bright field. The limit of resolution of a grating of lines is theoretically given as 0.21 micron for vision, and 0.15 micron for photography, for a perfect objective of 1.3 aperture, with a full cone of light, with wave length of 0.55 micron for sight, and 0.40 micron for the camera. According to Merlin (96), an ordinary achromatic objective of 1.3 aperture, properly illuminated, can detect (submicroscopic) particles or filaments 0.08 micron across; though their true sizes and their details would of course not be visible.

Limit of Useful Magnification.—In practice, the calculated limit of resolution is important chiefly as leading to an upper limit of useful magnification. This is usually between about 530 and 1,060 times the working aperture, varying with the acuity of vision of the observer, and presupposing correct adjustment and critical microscopy. It is usually taken as 1,000 times the working aperture. The lowest limit of magnification may be taken as 250 times the objective aperture, where the outer eyepiece circle is about equal to the pupil of the eye. But this is too low, the eyepiece required being usually less than 5-times. With accurate microscopy, 1,000 times the working

aperture gives sharp and brilliant pictures, even when it is also nearly 1,000 times the objective aperture. With less careful microscopy, a limit of 500 times the objective aperture is sometimes not to be attained together with satisfactory pictures.

Magnifications above the upper limit, unless the objective and adjustments are perfect, may only soften the image. In any case, they show nothing new to normally sharp sight, though they are useful for tired or dimmed vision. Some well-adjusted objectives of 1.3 aperture will, in the writer's experience, give enlargements sharply up to a maximum of about 1,600 or even 1,800, diameters, with a perfect condenser cone. It might perhaps be well to designate magnifications above the upper limit of 1,000 times the working aperture, as "enlargements." Such enlarged images are useful for drawing with the camera. Their sharpness is a good test of the correct adjustment of the objective.

Submicroscopic Objects.—Objects below the limit of resolution in size, but yet large enough, or opaque enough (in a bright field), or bright enough (in a dark field), to be visible as lines, ellipses, or discs, are submicroscopic. Some objects, like small microbes, may be in size somewhat above the limit of resolution, but invisible from not being opaque. Viewing them dry would increase their opacity by increasing their relative refrangibility.

Mounting Media of Different Refractive Indices.—The substance with which an unstained object is surrounded or permeated is of importance for its easy visibility. The most used of such media are probably; air, water, acetic acid, lactic acid, glycerin, paraffin oil, immersion oil, solid Canada balsam, styrax, monobromide of naphthalin, "hyrax," and realgar. Of these, air, water and immersion oil are perhaps to be preferred, for critical work, with air, water or oil-immersion objectives, respectively; since they do not affect the corrections of the objectives. Some refractive indices are useful to be known, and hence the following table has been compiled.

REFRACTIVE INDICES OF ORDINARY MEDIA

Air	1.0	Immersion oil	1.515 to 1.52
Water	1.33	Clove oil	1.53
Ethyl alcohol	1.36 to 1.37	Solid Canada balsam	1.54 to 1.55
Acetic acid (glacial)	1.37	Styrax	1.6
Paraffin oil	1.47 to 1.48	Monobromide of naphthalin	1.66
Xylol	1.49 to 1.50		
Thin cedar oil	1.5 to 1.51	Hyrax	about 1.8

1. The examination of small objects in air has been to a great extent replaced by balsam mounting, or viewing in immersion oil. But Coles showed (45) that stained spirochætes were most readily visible on a dark ground when dry, after fixing and staining red; and that the same was true of red-stained bacteria. It may be that it is worth while to apply this method to the filter-passing forms, since a dry objective with as high an aperture as 0.95 could be employed, corrected for use without a cover-glass (as for metallurgy). Some of the cocci, nearly invisible by ordinary methods, are, according to Merlin (96), as large as 0.5 micron across. This method might also be useful for demonstrating flagella. It may also seem worth while mounting such objects dry on the under side of a cover-glass of standard thickness, after fixing and staining; and using an oil-immersion objective of 1.4 aperture, with a condenser cone of 1.0. Since there is optical contact, the aperture of the objective would not be cut down, and the working aperture would be 1.2. In the writer's experience, this gives sharp images of dry bacteria, stained or unstained.

2. Since the refractive index of water, 1.33, is different from that of cellulose, and also from that of chromosomes, muscle fibers, etc., investigations in water, sap, serum, normal salt solution, and watery culture fluids, deserve to be carried on, as already stated, as a supplement to the study of balsam mounts. Thin agar jelly with an antiseptic may be used for mounting instead of water. Water of course is especially suited as a mounting medium for objects to be studied by water-immersion objectives,

because focusing up and down does not disturb the corrections, as it does in both dry and oil-immersion objectives.

3. Forty-five per cent acetic acid causes the chromosomes and nuclei to stand out distinctly in the transparent cytoplasm. Saturated with carmine, with a trace of iron, it serves as a fixative, stain, and mounting medium, all in one. For rapid fixation of chromosomes, few reagents approach it. It has an index of refraction only a little above that of water, and suits water-immersion objectives.

4. Paraffin oil (thick) was used by Coles without a cover-glass. He put it on dry preparations of bacteria or spirochætes mixed with granular matter, when viewing them, without a cover, with a dry objective on a dark field (46). A thin layer only was used. They then showed up clearly.

The refraction of ordinary paraffin oil is less than that of thickened cedar oil. In the writer's experience, ordinary paraffin oil cannot be substituted for the special immersion cedar oil without badly degrading the performance of the objectives (see also Coles, 46).

5. According to Britton ("Flora of the Northern States and Canada"), Canada balsam comes from *Abies balsamea* (L.) Mill., the balsam fir. Either in the natural state, or dried and dissolved in xylol, it has long been used to mount sections or smear preparations, in which the parts to be studied, if naturally colorless, have previously been well stained. Since neither the refraction nor the dispersion of the mixture of balsam and xylol are constant, nor equal to those of the immersion oil above the cover, when oil-immersion objectives are used, objects for accurate study should be mounted in immersion oil. Canada balsam is often acid, and causes stains to fade (Bolles Lee, Vademecum).

6. Cedar oil comes presumably from the pencil cedar, *Juniperus virginiana* L. The thin oil is thickened by exposure to the air till it has the index of 1.515 for the D line, the original oil having the index 1.510. It continues thickening and rising in refractive index, on further

exposure, till it becomes solid. Hence only fresh oil from the maker is to be used for immersion. When used as a mounting medium, it hardens slowly on the edges of the cover, but remains liquid, and of the right refractive index, inside. Using thickened cedar oil without a cover-glass, on smears viewed with oil-immersion objectives, introduces an error, unless the objectives are specially corrected for this, or the tube length sufficiently increased. Stains seem to keep well in immersion cedar oil (Bolles Lee, *Vademecum*).

7. Styrax is not often employed for stained preparations. In most preparations of diatoms seen by the writer, this medium is yellow; and it is sometimes cloudy.

8. Monobromide of naphthalin is used with the Zeiss objective of 1.6 aperture. The writer employs this objective on thin objects stained with iron-brazilin and mounted in hyrax. Before observation, the hyrax is removed from the spot by xylol. No cover is used.

9. Hyrax is the trade name of a new high refractive medium. It is said to have a refractive index of about 1.8. It shows diatoms well. The writer has found it of use to show fine details on some smear preparations stained with brazilin. It dissolves readily in xylol, and hardens on heating. When objects deep in hyrax are to be viewed with oil-immersion objectives, better images can be had by mixing enough xylol with the drop of immersion oil used.

10. Realgar is employable apparently only for diatom valves and for rulings on glass. Spitta's excellent photographs of diatoms were a result of his using realgar mounts.

Permanent and Temporary Preparations.—For the purpose of scientific work, we want our preparations to last long enough to be studied, and, if necessary, to be photographed. Whether or not the stain will fade after a few months does not apparently matter, unless the preparations are to be studied by others. However, in the writer's experience, it sometimes happens that the majority of the prepared and stored-up slides are not referred to again.

Preparations made only for study can be put in the light and watched, often with advantage, in the stages of fading. Doubtless a few of the best objects can be kept for consultation. But it is sometimes easier to make a fresh preparation, than to find a fadeless stain, or a neutral mounting medium. Brazilin-stained specimens, however, have kept for over a year in immersion cedar oil (Leitz) without perceptible fading.

A Classification of Objects.—Different classes of objects are met with in scientific research, and in routine work, and these need different methods.

1. Solid objects (*i.e.*, objects in which all three dimensions have to be considered) of fair size, which often require dissection or other manipulation, usually under water. For all such, the spectacle magnifiers with magnification of 2 (Fig. 5), and the low-power twin-objective binocular (Fig. 11) with powers of about 3½ or 4 to 10, are the instruments required. The layer of water over the dissection, however, should be as thin as practicable, consistent with complete immersion, for the distortion and injury to definition increase with the thickness, as they do with too thick a cover-glass on the standard microscope. The central axis of the binocular magnifier should be kept at right angles to the surface of the water.

2. Solid objects of rather small size, often in water, and requiring manipulation or dissection. For such work the stereoscopic binocular with twin objectives (or perhaps, for the higher magnifications, the monobjective erecting binocular—Lihotzky or Swan-Porro), magnifying from 10 to 50, is required. For examination of small algæ and rather small animals, in fresh or salt water, undisturbed, the water-immersion twin objectives made by several firms are to be preferred. For all observations under water with dry objectives, the layer of water should be as thin as convenient; and so it is probably better for the vessel to have a flat, rather than a concave bottom. A cover-glass is not usually required, either for objects in water, or for those in air (except occasionally to flatten the surface of a

drop), since the aperture of the objectives is usually less than 0.1. The image is injured, however, by the rays having to pass through the uneven cover of a Petri dish. It may be possible, in the case of fungus cultures especially, to have circular pieces of plate glass to replace the ordinary covers of Petri dishes, at least during observation. In all cases where the binocular is used without a stage, the main axis is best kept at right angles to the surface of the water or glass.

3. Small objects, mostly invisible to the unaided eye, usually examined on a glass slide, and mostly in water, are included here. For these, useful magnifications from 50 to 200 are needed, and these are obtained by the low-power objective of the standard microscope; which is, at the best, an apochromatic, with an initial magnification of 10, and an aperture of 0.3. This objective will in practice stand an eyepiece magnification of about 20 times. The objects for this lens, and for the achromatic objective of corresponding aperture, should be under a cover-glass between 0.1 and 0.2 millimeter thick. If a cover-glass is omitted, the tube may be pulled out for an appropriate short distance for correction. (This distance can be determined by the star test.) The water-immersed condenser, with a large diaphragm on the ground-glass disc before the source of light, can be employed for this low power without other change from its use with the high power, except increase in the size of the diaphragm on the radiant. This allows of a clear cone of uniform light of nearly 0.3 aperture being used, which brings out the full value of the objective without flooding (which is not the case with the concave mirror). The images of many of these objects (even if stained) are improved by using yellow-green light; but where the natural colors are to be noted, a filter of the bluish daylight glass is to be inserted between the tungsten lamp and the mirror. The Bitukni (or other) eyepiece attachment, for oblique vision with horizontal stage, may often be required in viewing objects in liquids.

4. This class includes objects which are usually examined with the high dry objective, after having been found with the low power of the standard microscope. Many objects in water can be examined in this way, in the absence of a good water-immersion objective, and of practice in its use. For all these, the correct cover-glass thickness is of importance; but in cases where the liquid between the cover-glass and the slide is more than 0.01 millimeter thick, the cover should be slightly thinner, rather than thicker, than 0.17 millimeter. With a thinner cover it is easier to make the required correction for a thicker layer of liquid, for the one compensates the other, more or less. Whereas, with a thicker cover, the tube length has to be reduced, both for the cover and for the layer of liquid over the object; and there is usually, in most monoculars with drawtubes, only 2 centimeters or less of reduction available (from 160 to perhaps 140 millimeters). The same applies to correction collars on dry objectives.

The correction of the condenser is important with this magnification, for with the 40 objective of 0.85 aperture, a condenser cone of 0.8 can sometimes be used with advantage; and this is only to be obtained from a well-corrected condenser, preferably the same water-immersion condenser used for the higher powers. After practice, it is convenient and easy to use a correction collar on this objective.

For this same magnification, however, we may also use the apochromatic objective 20, of 8-millimeter focal length, with aperture of 0.65. This objective will stand an eyepiece magnification of about 25, and has several advantages over objectives of smaller focal lengths.

5. This class includes all objects which are observed with apertures up to 1.25, with the high-power, water-immersion objectives. These objects are in water or a liquid of similar refraction, where the stratum between the cover and the slide is more than about 10 microns thick. If the object can be put in optical contact with the cover-glass, or within 10 microns of the cover, oil-immersion objectives

can be used with advantage. The covers should be 0.17 millimeter thick, if possible.

6. This class of objects includes those fitted for examination with the high-power, oil-immersion objectives with apertures from 1.2 to 1.4, used with a corrected immersion condenser at an aperture of over 1.0. These objects should preferably be mounted in xylol balsam of refractive index approximating 1.52, or, better, in immersion cedar oil. They may also be examined *without a cover* in the thickened cedar oil used for objectives, the tube length being slightly increased (the amount of increase being shown by the star test). Objects in water, or in media of quite different refrangibilities to balsam (such as ethyl alcohol, or hyrax), may also be correctly viewed, if the layer of liquid is not more than 10 microns thick, and if the tube is properly lengthened or shortened for less or more refraction, and less or more thickness of the layer. These objects may require the highest resolution of the microscope (though less may sometimes serve). The maximum resolution and definition, however, are only to be reached uniformly by one who has attained skill in the scientific use of the microscope.

Summary.—Objects in watery media are best viewed with a water-immersion objective; unless they are less than about 10 microns from the cover-glass, when oil-immersion objectives may also be used. The examination of objects dry or in water should not be altogether replaced by balsam mounting. The most important mounting media (from the optical point of view) are probably air, water, immersion oil, and monobromide of naphthalin, for the four classes of objectives, respectively.

Objects may be classified into: those suited for the binocular magnifier with enlargements up to 10 times; those suited for the ordinary Greenough, with magnification to 50; those suited to the 16-millimeter objective of the standard microscope, with power up to 100 times or more; those suited to the high dry objective (not higher than about 4 millimeters), with magnification to 400 or more; small objects in water suited to the high-power water-immersion

objective; and microscopic (or submicroscopic) objects, in (water or) immersion oil (or balsam), suited to the high-power, oil-immersion objective.

Practical Points

1. Use preferably the water-immersion objective for objects in watery fluids which are more than 10 microns in depth.

2. Keep the oil-immersion objective mainly for objects in immersion oil or a similar medium; or, if used on objects in water, for those which are in contact with the cover-glass, or less than 10 microns distant from it.

3. For investigation, temporary preparations in watery fluids are sometimes to be preferred to permanent mounts.

4. Stained bacteria and spirochætes often show well with dark-field illumination, mounted in air (Coles's method).

5. Choose an appropriate medium for mounting the preparation for investigation. The optically best media are air, water, immersion oil, and monobromide of naphthalin, for the four classes of objectives, respectively.

6. With the binocular magnifier and the Greenough, use as thin a water layer as convenient for objects under water.

7. Keep the main axis of the binocular magnifier or Greenough at right angles to the water in the dissecting dish.

8. Have plate glass discs if possible to cover Petri dishes when under microscopical observation.

9. Use rather a too thin than a too thick cover-glass, when a cover of the right thickness is not available. The same is the case with the slide.

10. It might be worth while in some cases to experiment with bacteria, smears, and submicroscopic organisms mounted on the cover-glass dry (stained or not), to be viewed with oil-immersion objectives through the cover.

11. To mark objects, draw an ink circle, with a fine pen and waterproof India ink, around the small circle of light on the object; there being a small diaphragm on the source of light. Or, better, draw a small circle around the object on a slip of paper equal to the slide and superposed on it (Bridges). This is afterwards placed on the slide, and the position of the centered image of the diaphragm on the source made to coincide with the circle drawn on the paper, by shifting slide and paper. The writer uses this method in preference to reading the scales of the detachable mechanical stage.

CHAPTER XI

THE COVER-GLASS PROBLEM

Loss of Efficiency with High Dry Objectives.—It has long been known to workers in biology or histology who gave attention to the quality of the image in the microscope, that there was often a loss of efficiency in the use of the ordinary (medium or) high dry objectives. This resulted from the fact that the high-power dry objectives could only be suited by one definite thickness of cover-glass (or cover-glass plus stratum of mounting medium above object). The ordinary microscope is often supplied with an 8 or 10 and a 40 dry objective. The 10 objective gives sharp, or fairly sharp, images under most of the usual conditions (provided, of course, that its surfaces are kept optically clean); while the 40 objective may be often disappointing, since it may rarely give as sharp images as the 10-times objective; and sometimes may show images with distinctly blurred outlines, as compared with the images given of the same object by an oil-immersion objective of the same aperture. Now the 40 objective, of 0.65 or 0.85 aperture, was calculated by the maker to give about as sharp an image as the 10 objective, within the limits of useful magnification; and when it does not, there is something wrong.

Cover-glass Thicknesses.—A medium or high-power dry objective requires for maximum sharpness and maximum working aperture that there should be a diaphragm on the source of light, the image of the source on the object being circular and equal to (or less than) the field of view.[1] The omission of this adjustment, however, does not injure the image fatally, since the lower condenser aperture which has to be used does no more than entail a loss of working

[1] See Beck, "The Microscope," Part 2.

aperture and, hence, of useful magnification. On the other hand, differences of cover-glass thickness (and covers in boxes marked No. 1 may sometimes vary from 0.09 to 0.21 millimeter in thickness), if near to or more than 0.03 millimeter from the standard, blur the image perceptibly, even in medium-power work. (The standard cover-glass thickness, as already stated, is most often 0.17 millimeter.) The loss to the image may be seen (1) by substituting a cover-glass of standard thickness, or (2) by employing a medium oil-immersion objective, of about the same focal length and aperture as the dry objective, on the object in question. For the oil-immersion objective is not so much affected by differences in cover-glass thickness as are dry or water-immersion objectives.

Remedies.—The blurring with the 4-millimeter objective can be remedied in several ways:

1. Cover-glasses near, or precisely, the standard thickness can be purchased for a small multiple of the cost of ordinary covers. This is probably the best remedy.

2. Number 1 (or No. 2) covers may be measured with a screw gage, and those at or slightly under the standard thickness selected for use on the objects most studied. Those thinner than this can be used for routine work with balsam mounts and oil-immersion objectives; and those thicker can be employed only for low-power work, or may be rejected.

3. If cover-glasses are selected between about 0.13 and 0.18 millimeter thick, a fair correction can usually be made by the sliding tube of the microscope. (But this method is rather antiquated, since covers close to the standard can now be obtained.) There should be, usually, 160 millimeters of tube length (from the shoulder of the objective to the upper edge of the drawtube) for covers of standard thickness. To correct the 40 objective of 0.85 aperture, for every 0.01 millimeter of cover-glass thickness (plus mounting medium over object) less than 0.17 millimeter, the tube is to be pulled out about 10 millimeters, and *vice versa*. This amount may be determined accurately by the star

test, used with an Abbe test plate. Hence, if the tube length can be shifted through the interval from 200 to 150 millimeters (which is not unusual), and if the objective is calculated for 0.17 millimeter of cover-glass thickness, correction can be made for covers from 0.13 to 0.18 millimeter by this means. (The 20 objective needs only about 2 millimeters increase for every 0.01 millimeter of cover-glass deficit.)

4. If a 40 objective with a *correction collar* is purchased, correction can then be made for cover-glass thicknesses from about 0.10 to 0.20 millimeter. In this case it is usually best to measure the covers with a special gage (which is the quickest way). This measuring may also be done with the micrometer screw of the microscope and a dry objective; multiplying in this case by 1.5, because the refraction of the glass makes it seem thinner.

5. Another remedy is to replace the dry 40 objective by a medium-aperture, oil-immersion objective, which gives nearly equally good images of balsam-mounted objects with all the usual cover-glass thicknesses.

6. A 40 water-immersion objective is made by one optical firm, which shows sharp definition in the center of the field with all ordinary thicknesses of cover-glass. It is of 0.75 aperture.

7. The 40 dry objective may be omitted from the outfit, and a 20 objective used in its place. This is less sensitive to slight differences of cover-glass thickness, and is more readily corrected by altering the tube length.

8. Cover-glasses may be omitted in all cases, and special dry and oil-immersion objectives employed, corrected for use without a cover-glass.

That some workers in histology are desirous that they should obtain from their microscopes as good images as the objectives were made to give, is shown by Professor Schmidt's article in the *Biologische Centralblatt,* for 1922, in which he describes the state of affairs which has come under his attention with regard to the cover-glass problem (113).

Correcting Oil-immersion Objectives.—For the best results, everything else being correct, a good oil-immersion objective must be corrected for cover-glass thickness by altering the tube length slightly (even on the binocular). It is sometimes preferable to have covers slightly less than 0.17 millimeter. This allows more working distance, and allows pressure to be more readily applied to the object (in immersion oil), since covers 0.14 millimeter thick bend more easily.

For a 60 apochromatic objective of 1.3 aperture, corrected for a 0.17 cover-glass, the writer finds by the star test that, with hard crown-glass covers, the tube length must be increased about an average of 2 millimeters for every 0.03 millimeter of decrease of cover thickness under 0.17. This correction adds the final sharpness to the image. Uncovered slides require an increase of about 10 millimeters to give crisp images, with this objective.

A 90 apochromatic of 1.4 aperture required an average increase of about 1 millimeter in tube length for each 0.01 of cover decrease under 0.17 millimeter. (Of course covers thicker than 0.17 would require a decrease in tube length, but such covers need not be employed.)

When oil-immersion objectives are used with objects in water, a slight increase in tube length is also needed for the depth (which should not exceed 0.01 millimeter) of the object under water. So the total increase of tube length in this case is more than if the object was mounted in immersion oil, with the same thickness of cover.

The required increase in tube length can be made in a binocular by pulling out the eyepieces (presumably sprung in) and applying a flexible scale. For the usual binocular attachment (Bitumi), the required increase must be nearly doubled. Its amount can be found by using the star test.

Summary.—If a 20 objective is not substituted for the 40 objective, it is best to purchase covers of, or slightly below, the correct thickness (unless the thinner and thicker covers can be utilized in other ways). Correction by the drawtube, and still more the use of the correction collar,

require a more or less expert worker, and may be tedious at first. The use of an oil-immersion objective of medium aperture is to be advocated in cases where many balsam mounts are to be examined, and especially where a high-aperture, oil-immersion objective is also used. It would also be convenient where stained bacteria are examined without a cover-glass. The water-immersion objective of medium aperture is adapted for use when most of the objects are mounted in aqueous media, and especially when a water-immersion objective of high aperture is also employed. For optimum work all objectives (including oil-immersion objectives) must be used with correct covers.

Practical Points

1. It is best to select covers of the right thickness; but in other cases one may correct the 40-times objective for different cover-glass thicknesses by altering the tube length; choosing one of 0.65, instead of 0.85, aperture.

2. We may also omit dry objectives higher than 10, and use only No. 1 covers, between 0.15 and 0.17 millimeter in thickness.

3. In some cases a high dry objective of 0.85 aperture with correction collar is convenient.

4. The high dry objective may be replaced by an oil-immersion objective of equal aperture (which requires a much smaller correction for wrong covers).

5. Or a water-immersion objective with correction collar may sometimes be used with advantage.

6. The cover-glass itself may be omitted, and special oil-immersion objectives (or specially corrected dry objectives) used throughout. An ordinary 90 oil-immersion objective of 1.3 aperture gives nearly as good images without a cover-glass as with one (if the tube is lengthened about 1½ centimeters) since the cover deficit is replaced by an equal thickness of immersion oil.

7. If an extra thick cover-glass is sometimes met with on any object, the remedy is not necessarily to purchase a microscope with a large extension and contraction of tube length. It seems more practical to remove such thick covers, and substitute normal ones. If the objects are mounted on the cover-glass,

this can be reversed and cemented by balsam to a thin slide by its free side, and a normal cover placed over the object, now on the upper side of the old cover.

8. On the whole, the final solution of the cover-glass problem seems to the writer to be to purchase sufficient covers 0.16 to 0.17 millimeter thick, and to use them on all objects requiring special study.

CHAPTER XII

THE OBJECTIVE

Structure.—The objective is made of single lenses (for example, the front lenses of the higher powers), as well as doublets, and sometimes triplets, whose function is to take as much as possible of the divergent light from the object and change it into the slightly convergent rays that meet in the upper end of the microscope tube in the front focal plane of the eyepiece, forming a magnified image there, to be further magnified by the eyelens. It is obvious (from the equation $O = \frac{f_1 f_2}{L}$, where O is the distance of the object from the front focal plane of the objective, f_1 and f_2 the front and back focal lengths of the objective, and L is the optical tube length of the microscope) that the longer the microscope tube, the nearer the front lens of the objective must be to the object; that is, the shorter is the working (or viewing) distance (though not in proportion). This working distance is also shortened by separating the front and back combinations of the objectives, as is done by a correction collar; and also by putting a converging achromatic lens behind the objective. In this last way, a dry objective might be corrected for uncovered objects. On the other hand, an achromatic diverging lens, or amplifier, behind the objective, may be used to correct for too thick a cover-glass, such as the 0.4-millimeter cover used in counts of blood corpuscles. Much of the magnification of a high objective is done by the front lens (or two lenses in the highest powers), which is uncorrected and small, and thus of strong curvature. The back combinations of doublets or triplets serve mainly to supply the corrections. An objective is corrected for one definite tube length only (and one cover-glass thickness) at which it is at its best.

But a change of cover thickness may be partly balanced by a change of tube length, or a change of lens distance. Notwithstanding this, slightly better images are given (in the writer's experience) by standard cover thickness, standard tube length, and standard lens distance, than result from any corrections.

A high-power microscope objective is one of the finest optical products, ranking near the astronomical telescope objective in accuracy of manufacture, and the microscopist's endeavor should be to get out of it all the possibilities the optician put in.

Focal Lengths.—The lowest ordinary single objectives of 50 to 25 millimeters focal length are probably best replaced by the twin-objective binocular, which gives marked stereoscopic images; for stereoscopic vision is at its best at magnifications below 50 or 100. Where the twin-objective binocular usually leaves off, namely at useful magnifications of 50 to 100, there the single-objective binocular may well begin. Lower magnifications (from 30 upwards) can be had, however, with the 10-times objective on the monocular or on the standard monobjective binocular, by using low eyepieces. Hence there would seem to be little use, in advanced work, for single objectives lower than the 16-millimeter (or of 8 to 10 initial magnification), and such objectives are not usually made in the apochromatic series. Their employment would require the removal of the condenser; whereas the 16-millimeter objective can be used with the same condenser as the highest oil-immersion objective, with a sufficiently large source of light, if care is taken to reduce the aperture of the condenser enough every time. Objectives may ordinarily be classed, in high-power work, as searching or viewing, and observing or working, objectives.

The 2/3-inch or 16-millimeter objective, of about 10 initial magnification (new style of reckoning) with an aperture of 0.2 to 0.3, will give useful magnifications from 50 to 200 times, and is usually the finder or searcher objective. The 1/3-inch or 8-millimeter objective of 20 initial

magnification, with an aperture of 0.4 to 0.65, will give useful magnifications from 100 to 400, or more; and may be used as a viewer objective for chromosomes, and also as a searcher for spirochætes (Coles, 45, 46). Both these objectives may be corrected for uncovered objects by appropriate increase of tube length; an increase of 35 millimeters for the apochromatic 20, according to Coles (46), with 160-millimeter tube-length; and much less for the 10 objective.

The 1/6-inch, or 4.3-millimeter objective (of about 40 magnification) is commonly used in routine work. It should not usually have a higher aperture than 0.65, unless a correction collar or alteration of tube length is employed to correct it for different cover-glass thicknesses. The 40 achromatic or fluorite dry objective of 0.85 aperture with a correction collar, makes a fair viewer, especially in conjunction with a high-power, water-immersion objective. It is at its best, however, with dry objects only. The 50 or 60 oil-immersion objectives, of aperture from 0.85 to 1.05 are especially used with dark-field illumination; but they are useful viewers for oil-immersion objectives of higher aperture, and excellent observing objectives for much routine or other work. Their further employment is to be recommended, to replace, more or less, the high dry objectives.

For "observing" (or "working") objectives of the highest power, experience seems to have fixed on 2 millimeters (90 magnification) as the best focal length for the apertures of 1.3 and 1.4; though the achromatic 1/12 is usually a 1/14, that is of 1.8-millimeter focus, and 100 magnification; and the 1/16 of 1.5 millimeter focal length is often preferred for photography (Coles, 46, and E. B. Wilson). Abbe (14), however, considered the 3-millimeter objective preferable for the highest powers of the apochromatics in respect to the definition in the extra-axial parts of the field, and its readier manipulation. It is a comfortable high power to use with a 20 eyepiece because of its long working distance, and it is often preferred by the writer to objectives of shorter focus, except for photography.

High-power, water-immersion objectives are not offered by all makers. The 2-millimeter achromatic and the 2.5-millimeter apochromatic water-immersion objectives of Zeiss have correction collars, and it needs some practice before expertness in their use is attained. Leitz has a 2-millimeter, water-immersion objective without a correction collar, and so it can be corrected only by unscrewing more or less the front two lenses, or using only covers 0.17 millimeter thick. (Spencer also makes a high-power, water-immersion of 1.0 aperture.) The use of water-immersion objectives is advocated by the writer on objects in a layer of water more than 10 microns deep, as already stated more than once.

Apertures and Magnifications.—The excess aperture of an oil-immersion objective over 1.0 cannot be illuminated by rays of light in air. Consequently, on holding such an objective up to the light of a window, and looking through it from the back, at the front lens, with a 3- or 4-times magnifier, a dark ring is seen round the illuminated part. This ring is due to the excess of aperture over 1.0. This dark ring of course becomes relatively wider as we pass from a 1.05 objective to the 1.25, 1.3, and 1.4 oil-immersion objectives.

The due ratio of aperture to focal length was discussed by Abbe (14). Since the aperture of an objective determines the limit of useful magnification, we should calculate for each objective the highest magnification which can advantageously be used. In the modern way of calculating magnifications, the objective is credited with the magnification given to the image which would be formed by it if the Huyghenian eyepiece were removed (or the image which *is* formed in a magnifier eyepiece, like K 15 of Zeiss), the rest of the total magnification being reckoned as due to the eyepiece. Several optical firms now mark the objectives with these initial magnifications, by which numbers the objectives can be conveniently designated instead of by their focal lengths. The latter had gradually become more or less erroneous; many objectives having true focal

lengths smaller than those by which they were called in the catalogues, and which were marked on their mounts. The optical tube length also, which influences the magnification, is shorter with the low powers. Hence an objective 10 is one which produces an image 10 times the size of the object, with the standard mechanical tube length. Such an objective would have a focal length of about 16 millimeters. The new eyepiece magnification is equal to the old multiplied by $^{25}/_{18}$, as the new magnifying numbers of the apochromatic objectives are equal to the old numbers multiplied by $^{18}/_{25}$ (allowing for slight actual changes in focus).

TABLE OF CALCULATED LIMITS OF SEPARATION AND MAGNIFICATION

Objective magnification	Minimum distance separable, microns	Maximum useful magnification	Maximum eyepiece magnification	Aperture of objective
Achromatic and fluorite objectives				
8	1.38	200	(25)	0.2
20	0.68	400	(20)	0.4
40	0.42	650	16	0.65
40 Fl. c.c	0.32	850	21	0.85
90 W.I. c.c	0.23	1,180	13	1.18
90 O.I	0.22	1,250	14	1.25
100 Fl. O.I	0.21	1,300	13	1.3
Apochromatic objectives				
10	0.92	300	30	0.3
20	0.42	650	32	0.65
40	0.29	950	24	0.95
60 O.I	0.26	1,050	18	1.05
70 W.I. c.c	0.22	1,250	18	1.25
60 O.I	0.21	1,300	22	1.3
90 O.I	0.21	1,300	14	1.3
120 O.I	0.21	1,300	11	1.3
60 O.I	0.20	1,400	23	1.4
90 O.I	0.20	1,400	16	1.4
74 Mbn. I	0.17	1,600	22	1.6

(W.I., water immersion; O.I., oil immersion; Mbn.I., monobromide of napthalin immersion; Fl., fluorite; c.c., correction collar.)

If we regard the highest useful magnification as 1,000 times the working aperture (which allows 4 times the ordinary limit of *good* eyesight in *just* seeing details), then the highest allowable eyepiece magnification is this figure divided by the magnification number of the objective. This presupposes a faultless condenser cone nearly equaling the objective in aperture. Thus for the apochromatic objective 10, of 0.3 aperture, the highest useful magnification would be 300, and the highest allowable eyepiece magnification would be 30. For the 60 and 90 objectives of aperture 1.3, the highest useful eyepiece magnifications would be 22 and 14, respectively. Comparing the objectives of 1.3 and 1.4 aperture and 90 magnification (2-millimeter focus), we have 14.4 and 15.6 for highest eyepiece magnifications, and these are not markedly different. In practice the eyepiece magnifying 15 times would be used for both.

The table gives the limit for optimum results with yellow-green light, a perfect condenser, and maximum contrast in the object. The figures are mainly calculated from optical theory, not derived wholly from experiment (this being difficult).

Adjusting the Objective.—The adjustment of the objective by the user is for spherical aberration only. An uncorrected lens has a shorter focus for its marginal zone, the focus decreasing from the center to the margin. An undercorrected lens has more or less of this state left. An overcorrected lens has shorter focus in the center than at the margin. A corrected objective can only be in adjustment for one definite working distance, which depends on the circumstances given below.

Causes of Overcorrection	Causes of Undercorrection
1. Denser mounting medium than air, water, or cedar oil, respectively.	Mounting medium of lower refraction than that before the objective.
2. Too thick cover-glass.	Too thin cover-glass.
3. Denser immersion medium than water, or cedar oil, respectively.	Immersion medium of less refraction than the objective was calculated for.

4. Objective lenses too far apart.	Objective lenses too close together.
5. Correction collar at too low a number.	Correction collar at too high a number.
6. Convex corrected lens behind objective.	Concave corrected lens behind objective.
7. Drawtube too long.	Drawtube too short.

Since overcorrection of course cancels undercorrection, any of the causes of overcorrection can be used to cancel more or less any of the varieties of undercorrection, and *vice versa,* especially when a green screen is also used. The following tests may be applied:

Overcorrection	Undercorrection
1. *Star test.* Bright spot in silver film (or nigrosin smear), or with dark field. Faint, misty expansion *within* focus of objective. Sharp ring *beyond* focus of objective. (Siedentopf.)	Diffraction mist *beyond* focus of objective. Sharp ring *within* focus.
2. *Diatom test.* Fine dots or lines (Pleurosigma or Surirella) focus *beyond* focus of coarser parts of valve, so that the microscope has to be raised to focus the dots. (Conrady.)	Details focus *within* focus of coarser parts; *i.e.,* the markings seem below the valve.

On the Choice of Objectives.—For the different kinds of microscopical work, either routine work or research, the lowest single objectives have been commonly replaced by the Greenough binocular, because of its stereoscopic effect (and leading optical firms have lately added objectives of 8 and 12 initial magnifications to the Greenough). Hence the 16- (or 18-) millimeter objective of 10 (or 8) magnification, which is needed as a finder, and which has a higher aperture than any objective commonly used on the Greenough, appears to be, as already stated, the lowest objective usually needed on the standard microscope. For the next higher objective, however, a 20-times (8 millimeters), or a 50 or 60 oil-immersion objective of 0.85 to 1.0 aperture, such as is now manufactured for dark field, would, the writer thinks, be often preferable to a dry 40 objective. However, for routine work, a 40 achromatic

objective of 0.65 aperture is popular. The dry 40-times fluorite or apochromatic objective of 0.85 or 0.95 aperture is, it seems, to be avoided for ordinary purposes, unless the user is ready to purchase only covers 0.17 millimeter thick, or to compensate for different cover-glass thicknesses by adjusting the tube length, or by using a correction collar. For the highest oil-immersion objective, the lower aperture of 1.2 or 1.25 is to be favored for routine work, instead of 1.3, because of the greater working distance, and other advantages. An increase of more than 0.1 of working aperture can readily be obtained for the objective of 1.2 aperture by the use of a corrected, instead of an uncorrected, condenser, and by employing screens to moderate too intense light, instead of having to lower the working aperture by closing up the condenser iris.

Of achromatic and fluorite objectives used on a microscope having a double nosepiece, instead of objectives 10 and 40 (the usual outfit), the objectives 10 and 20, or 10 and 50 oil, seem useful combinations. With a triple nosepiece on the microscope, instead of the usual objectives, 10, 40, and 90 or 100 oil; the objectives 10, 20, and 50 oil; or 10, 50 oil and 90 oil, appear to the writer to be good combinations. Lastly, with a microscope provided with a quadruple nosepiece, the objectives 10, 20, 50 oil, and 90 oil; or 10, 40 dry with collar, 90 water immersion and 100 fluorite; are apparently suitable for biological work with high powers. Some may prefer to use the objective 40 of 0.65 aperture, having No. 1 cover-glasses and adjusting the objective when necessary by altering the tube length; and some may prefer objective 40 of 0.85 or 0.95 aperture with a correction collar; though the writer has tried these, and does not like them for continuous work, where every item of labor saving counts, for the collar of a dry objective on a balsam preparation requires constant changing, varying with the depth of the part of the object viewed. It is advisable, however, that the nosepiece should take in all the objectives likely to be frequently used; for, with much screwing and unscrewing, time is wasted, and objec-

tives are liable to be dropped. Also, it is important that the objectives should be centered and made to register by the manufacturer, on the nosepiece in use.

Of the apochromatic objectives, which are usually used for research in high-power work, perhaps 10 and 20 are important in the dry series. The latter, which can be dispensed with for most work, but which saves some changing of eyepieces, is necessary for Coles's method of viewing bacteria, cocci, spirochætes, and malarial parasites, stained and dry on a dark field. The 90 oil objective of 1.3, and the 90 of 1.4 aperture, are also useful for high-power research; unless they are replaced by the 60's of the same apertures, which are often more convenient, because of their longer working distances. If much photography is done, the 120 apochromatic objective is useful. For microscopists who work with objects in aqueous media, and who have acquired the skill to use a correction collar readily, frequent employment of the apochromatic water-immersion 70 may often repay the extra trouble of measuring cover-glasses. Instead of high-power apochromatics, fluorite objectives, used with green light, will often suffice, even for difficult work.

To get the most out of any of these objectives there must be a proper condenser.

1. An uncorrected, two- or three-lens condenser, used immersed when necessary, with an illuminated ground glass near its anterior focal plane is often used for routine work.

2. A dry achromatic condenser is certainly better for high powers.

3. An aspherically corrected (aplanatic) immersion condenser, with a deep yellow-green screen, may be used, especially with achromatic objectives.

4. An aplanatic achromatic immersion condenser is satisfactory for use with apochromatic objectives. If one wishes to economize, it is better to have one objective less, and in its place a corrected condenser; the latter costing only as much as, or in some cases even less than, a high

dry objective. An error in the choice of objectives for routine work is sometimes the getting of objectives of a too short focal length and too high aperture for the work in hand, together with too poor a condenser. Thus an oil-immersion 90 objective of 1.3 aperture, or a dry 40 or dry 60 objective, are often advantageously replaced by an oil-immersion objective of 0.85 or 1.0 aperture, and a 20 dry objective respectively; while the saving in cost would perhaps enable a dry *achromatic* condenser to be procured.

The apochromatic objective of 1.4 aperture is not always equal to its fellow of 1.3 aperture for all-round work. It requires more careful centering and illumination, and more attention to accurate tube length, and cover-glass thickness.

Achromatic and Apochromatic Objectives Compared.—The apochromatic objectives, if equally well made, are superior to the achromatic objectives because they are spherically corrected for two colors and all zones; while the achromatics are spherically corrected for one color only, and differ in different zones. That the apochromatics are chromatically corrected for three, instead of two, colors, as in the achromatics, also makes the former superior, both visually and for photographs, when yellow-green screens are not used. The achromatic objectives can only be employed to best advantage by using a more or less perfectly monochromatic yellow-green screen. In practice, the apochromatics are usually slightly superior to the achromatics, even when a yellow-green screen is used for both. Good fluorite objectives with a green screen, however, are close to the best apochromatics in definition. When employed with white light the apochromatics are markedly superior.

The writer has had occasion to use the achromatic $\frac{1}{12}$ objective and the apochromatic 2-millimeter, of one maker for two years or so; and again the 2-millimeter achromatic water-immersion and the 2.5-millimeter apochromatic water-immersion of another firm have been

used alternately for some years, in each case with yellow-green light. The slight superiority of the apochromatics was obvious. Much good work can be done, however, with achromatic objectives and green screens. Coles preferred fluorite oil-immersion objectives with a green screen to apochromatics for research on blood parasites, and the writer finds a fluorite 100 objective often useful with a yellow-green screen.

Centering Objectives.—We may distinguish two kinds of centering: making the optic axis of the objective parallel to or coincident with that of the eyepiece, and making the field of the low or medium objectives concentric with the field of the high-power objective. Centering of the first kind is especially important with objectives of high aperture. Centering of the second kind is useful and necessary in practice, but must not interfere with the first kind of centering, at least with the high-power objectives. The Zeiss objective changers, and objective-centering rings permit the first kind of centering to be done perfectly, if the shoulders of the objectives are accurately at right angles to their optic axes. In this case the centering of the high powers can be done with a test object, such as *Surirella gemma* in hyrax; and the low and medium powers can be made fairly concentric with these tested high powers.

If, as is mostly the case in practice, a revolving nosepiece is used, then we may put two or three centering collars on a double or triple nosepiece (shortening the tube length by 15 millimeters to compensate). Otherwise we should test a satisfactory high objective with and without the nosepiece. It should center precisely the same. If not, the nosepiece requires alteration or adjustment. In Zeiss nosepieces, adjustment from side to side is made by the snap, and adjustment from front to back by lateral play of the screw when screwing up. When the nosepiece is correct, the lower powers can be made more concentric with the tested high power by putting a film of gum of the right thickness on the right spot of the shoulder.

Care of the Objectives.—Both front and back lens surfaces of the objective require regular examination with a magnification of 3 or 10 times; and the front lens especially, requires usually rather frequent cleaning. The front lens of the 10 objective should remain clean for a long interval, but the front surface of the 20 may occasionally come into contact with oil or liquids. It should then be cleaned with a small roll of lens paper, moistened with xylol if necessary, and finally with lens paper moistened with distilled water. A water-immersion objective seems to get more or less greasy in time on the front surface; and, in the writer's experience, this surface must be regularly cleaned, first with a roll of lens paper slightly moistened with xylol, and then with another roll of paper moistened with distilled water. Even an oil-immersion objective may well be cleaned with xylol and lens paper just before use, for a slight smear of dried cedar oil may be on the front surface and will certainly injure the definition. The back lens of an objective catches any particles which fall down the tube; especially if the eyepieces are often changed. This dust must be regularly removed. The coarsest particles can be removed by blowing on the back of the detached objective through a long, thin glass tube; or by suction from a rubber bulb. The rest of the dust the writer finds (together with a film which appears in some laboratories) is best removed by a roll of lens paper just moistened with distilled water. Dust on a lens surface, however, harms the image less than grease or a film. A touch of the finger always deposits grease on clean glass, and lens paper which has been touched by the fingers carries this grease, to spread it as a fine film over the lens surface. This is obviated by making small rolls of lens paper, and using always the freshly torn end of a roll. Most soiled lens surfaces should be wiped first with xylol, to remove grease.

Objectives not in use on the nosepiece are well kept, in the writer's experience, out of their boxes, in an ordinary dessicator over fused calcium chloride. In this

they do not deteriorate, and when subsequently screwed into their boxes they are quite dry. Under the bell jar, with the microscope and its attached objectives, there may be a wide-mouthed jar of fused calcium chloride. If the edge of the bell jar rests on rubber, and any liquid which collects in the jar is often poured out, the drying material in a half-pint jar will last a year; so that the microscope is dried, and kept thoroughly dry, even if used every day. This precaution of course is more necessary when the condenser is water immersed.

Where dry and oil-immersion objectives are made of similar brass cylinders, and so are not readily distinguishable, it is well to run an India ink line around the oil-immersion objective, and fix it with cellulose lacquer. A single line can be used on an objective of 1.3 aperture, and a double line on an objective of 1.4 aperture.

Summary.—For magnifications up to 50, the twin-objective binocular is often preferable. Two objectives, a 10 and 40, of 0.2 (to 0.3), and 0.65 apertures respectively, are mostly employed in routine work, with fixed tube length. Only if the use of a correction collar or alteration of tube length is regularly practiced, or if only covers 0.17 millimeter thick are used, should the 40 objective of 0.85 aperture be employed. Dry objectives of higher apertures than 0.85 are not usually desirable (Conrady), unless with concave fronts (Zeiss). The 20 objective may replace the 40 more often than is realized (Beck). The 50 or 60 oil immersion of about 1.0 aperture may often be used in routine work instead of the 90 or 100 objective of 1.25 or 1.3 aperture. The 60 apochromatic of 1.3 aperture is useful with high eyepieces (such as 20 compensating), having several advantages. The 90 achromatic or apochromatic of 1.3 aperture probably remains generally the best working (observing) lens. Objectives of 1.4 aperture require more careful adjustment, or they may not be equal, for biological work, to those of 1.3 aperture. Apochromatic objectives are only slightly better than achromatic objectives when both are used with green light. With

yellow-green light, fluorite objectives may sometimes be preferred to apochromatics (Coles). Objectives may be classified, for high-power work, as searcher objectives, viewer objectives, and observing objectives. No higher eyepiece should be regularly used than will cause the total magnification to equal the sum of objective and used condenser apertures multiplied by 500. Causes of over and undercorrection are given. For objects in water, water-immersion objectives are often best. Whatever high-power objective is possessed, if the best is made out of it, it will approach fairly closely to the limit of observation; for the difference between an ordinary 90 or 100 achromatic objective of 1.3 aperture, optically clean and properly illuminated and adjusted, and a 90 apochromatic objective of 1.4 aperture (costing three times as much), uncleaned and incorrectly illuminated and adjusted, is usually in favor of the former.

Practical Points

1. If necessary, purchase fewer objectives, in order to be able to get a corrected condenser instead of an uncorrected one, for scientific work; as well as a supply of cover-glasses 0.17 millimeter thick.

2. Keep in mind the limits of useful magnification for the objectives in hand, with full condenser cones.

3. Use apochromatic objectives, if possible, for all but routine work, unless green light is regularly employed.

4. With achromatic or fluorite objectives employ a yellow-green color screen for difficult research work.

5. The high dry 40 objective of 0.65 aperture may well be omitted for most work and replaced by a dry 20, or a 50 or 60 oil immersion.

6. For most objects in aqueous fluids, use, if possible, water-immersion objectives.

7. Use the oil-immersion objective of 1.4 aperture on stained slides with a solid cone from a corrected condenser of 1.2 to 1.3 utilized aperture. If this causes glare on well-stained preparations, some adjustment is wrong.

8. The oil-immersion 60 (3 millimeters) is sometimes to be preferred to the oil-immersion objective 90 (2 millimeters) of the same aperture, having a longer working distance, and other desirable qualities. It is however more sensitive to tube-length differences.

9. The high dry objective, achromatic or apochromatic, and the high water-immersion, should have correction collars, especially if used on a binocular.

10. For routine work, use, preferably, oil-immersion objectives of apertures 0.85 to 1.2, rather than those of 1.3 aperture. The former are often useful in investigation also, when it is not a question of markings or bodies at the limit of vision.

11. Do not dismount the lenses of the objectives by removing the lens rings from the objective tube in the new form of mount, or the centering may be injured.

12. Keep the front lens of the objective optically clean.

13. In summer, or in damp climates, it may help to keep the objectives in a dessicator.

14. One who has acquired some skill in microscopical matters can correct (for covers under 0.17 millimeter thick) a high dry objective, or a high water-immersion objective, without correction collars, by unscrewing slightly the front lens or the two combined front lenses. This is especially important with the binocular microscope.

15. One should get the most out of every objective, by using a large enough condenser cone.

16. All objectives should stand at least a 7/8 cone (that is a cone of 7/8 the diameter of their back lens) of light from the condenser, on a well-stained object, without glare. This cannot be done if there is noticeable spherical aberration due to maladjustment, or if they are out of center on the nosepiece, or if the condenser is not concentric with them.

17. The condenser light circle on the back of the focused objective should be under frequent observation.

18. The microscope objectives made by the leading makers, when correctly used, usually show differences less than identical objectives might show in the hands of skilled and unskilled users.

CHAPTER XIII

THE WATER-IMMERSION OBJECTIVE

Advantages of High-power Water-immersion Objectives.—The high-power water-immersion objective may well be used whenever the objects are in water, or in an aqueous medium of approximately the same refractive index as water; such as, blood serum, normal salt solution, plant sap, dilute sugar solution, sea water, diluted acetic acid, or watery jellies. Under these circumstances, except with objects in optical contact with the cover-glass, or within a few microns of it, a good water-immersion objective, properly adjusted, gives markedly harder, less glassy, and more realistic images than those given by an equally good oil-immersion objective; *the difference increasing from zero with increase in the depth below the coverglass of the watery liquid focused through.* Of course, for objects in balsam or immersion oil, or for objects in optical contact with the cover-glass, the oil-immersion objective is unrivaled, if the tube length is correct. The oil-immersion objective, however, sometimes gives slightly impaired figures because of wrong cover-glass thickness. This may be compensated for by altering the tube length (which can only be done on the binocular by pulling out the eyepieces partially). In such cases the water-immersion objective, with its correction collar, may be superior to the oil-immersion objective. However, a water-immersion objective is troublesome to use on balsam-mounted objects, when the depth of the object below the cover is variable; because the correction collar must be altered continually. But for balsam preparations spread in a plane, especially if on the cover-glass (such as bacterial and blood smears), the water-immersion objective may give good images. Thus Prof. W. J. Schmidt (113) says:

Auch habe ich zuweilen den Eindruck gehabt, dass ich die mit der Zeisschen Wasser-immersion (2.5, n. Ap. = 1.25) erreichte Bildklarheit mit der Oelimmersion, die ungleich jener keine Korrektions-fassung hat, nicht erreichte.

The real use of the water-immersion objective, however, is on objects in a medium approximating 1.33 in refractive index.

Kinds of Water-immersion Objectives.—Omitting the low-power plankton lenses, there are but few kinds of water-immersion objectives now manufactured. The widespread use of the oil-immersion objective, especially in medical schools, where it is unrivaled for the observation of stained bacteria without a cover-glass, has rendered the water-immersion objective (which was in universal use up to 1878, when Abbe calculated the first commercial oil-immersion objective) nearly obsolete. The microscope firm of Zeiss, however, makes three excellent water-immersion objectives:

1. The one-sixth of 0.75 aperture, which gives the best definition in the middle field only, and by this sacrifice allows more latitude in cover-glass thickness. This objective was used in the first ultramicroscope by Siedentopf and Zsigmondy in 1903. Mann perhaps referred to it in *Science.*[1]

2. The achromatic objective 90, of aperture 1.18, with a correction collar, gives excellent definition, with covers near 0.17 millimeter thick and a 12.5 times eyepiece.

3. The apochromatic objective 70 (2.5 millimeters), has the maximum aperture of 1.25; and is a fine objective both for observation and photography, when used with a cover between 0.16 and 0.17 millimeter, and a 15 eyepiece. One or two other opticians, as already noted, also make water-immersion objectives.

Correction Collar.—The high-power, water-immersion objective should not be used without a correction collar, since 0.01 millimeter of cover-glass thickness makes a

[1] *Science*, **55**: 539. 1922.

marked difference, and large cover-glasses may vary to this degree or more in thickness in different parts. It is best, even with an objective having a correction collar, to select covers with a narrow range of thickness; about 0.14 to 0.17 millimeter, where 0.17 is the standard; for, in the writer's experience, there is a more perfect image when the cover thickness is equal to the standard, even when the correction collar is used with skill. The best way to use the correction collar is to measure the cover with a gage; or, when the cover is already on a slide, to calculate its thickness by focusing with a dry lens, from the lower to the upper surface of the cover (or *vice versa*), and multiplying the reading of the micrometer by 1.5. (With the new fine motion of Zeiss, where each scale division is 2 microns, the reading is simply multiplied by 3.) The finer correction is then made by observation of the object as the collar is moved slightly each way. The true correction may be marked on the cover with India ink. One optical firm makes a water-immersion objective of aperture 1.2, without a collar. The writer finds this is best used by slightly unscrewing the two front lenses, for covers below 0.17, instead of correcting by lengthening the drawtube. It cannot be used with thick covers.

Necessary Precautions.—To get perfect results, certain precautions must be taken with a water-immersion objective:

1. Distilled water, and not tap water, should be used for immersion, since otherwise the salts in the tap water may in time form a deposit on the front lens. (Even in a small bottle of distilled water, bacteria will often multiply, unless it is frequently changed.) If drops of water are put both on the front lens and on the slide, there will be little trouble from air bubbles, even with the concave front of the two high-power, water-immersion objectives of Zeiss.

2. Slight traces of grease soon get on the front lens, and oil will float as a film on the water used for immersion. Hence, after using, the front lens should be dried with a small roll of blotting paper; and then cleaned with a roll

of lens paper just moistened with xylol and afterwards with distilled water. This requisite cleaning, the necessity for a correction collar, and the consequent unavoidable measurement of cover-glasses, are the main causes of the comparatively small use of water-immersion objectives. Another reason why the water-immersion objective has not yet been fully appreciated, is that its performance is much improved by diaphragming the source of light focused on the object, until the illuminated part is just equal to (or less than) the field of view.[1] (The improvement of an oil-immersion objective by this is somewhat less.) A water-immersion objective of 1.2 or 1.25 aperture should, with a corrected condenser, resolve one of the medium valves of *Surirella gemma*, mounted in hyrax, into (a sharp net, or) sharp rows of dots, with an eyepiece of about 15 times. (The sharpness of the picture is the test; not the mere resolution, which can be done with a lower aperture.)

Another Advantage.—One other advantage of the use of a water-immersion objective is that, with water immersion for the condenser also, and the use of the Detto slide bar instead of a mechanical stage, the slide can be floated on a capillary layer of distilled water on the stage (and kept free from immersion oil running over the lower edge); which allows an almost frictionless motion to and fro when searching preparations under large covers. The water-immersion objective has also the considerable advantage, in searching a slide, that the cover-glass can be wiped clean with a touch of a folded piece of blotting paper; so that the dry "finder" objective gives good definition, which is not marred by smears of oil on the cover, as it is when a high-power oil objective has been used just before.

If a 40-times dry objective with a correction collar is also used with a 70 or 90 water-immersion objective, one measuring of the cover is sufficient for both correction collars to be set.

Summary.—The oil-immersion objective is best for the study of objects permeated with immersion oil or bal-

[1] *See* BECK, "The Microscope," Pt. 2.

sam, in which refractive differences of cytoplasm, chromosomes, etc. are mostly lost, and vision depends mainly on artificial color differences. But this method, which has given such good results during the past 50 years, requires to be supplemented; first by dark-field illumination; and second by the observation in a bright field of objects not resinified, showing all natural differences of refraction. This latter is the function of the two improved high-power, water-immersion objectives here mentioned. However, the water-immersion objective should be mainly in the hands of the more or less experienced worker, and should not be entrusted to the beginner in microscopy.

Practical Points

1. The oil-immersion objective is superior for objects in immersion oil or balsam, or for objects in optical contact with the cover-glass.

2. For objects deeper in water than a few microns, the water-immersion objective is superior, as is seen in most iron-acetocarmine preparations.

3. The cover-glass should be 0.17 millimeter thick, as closely as possible, and should be measured by a gage; or, if on the slide, by a dry objective and the micrometer screw of the microscope (multiplying the measurement in microns by 1.5 in this case).

4. The high-power, water-immersion objective should have a correction collar. The collarless objective of one maker is better corrected, the writer finds, by unscrewing than by increasing the tube length, for thin covers.

5. Water-immersion objectives should be used with distilled water only, and the front lens must be kept free from traces of oil or grease.

6. If the high-power water-immersion does not resolve *Surirella gemma*, mounted in hyrax, into (a sharp net or) sharp dots, some adjustment is wrong, or there is oil or grease on the front lens.

7. If the adjustments are all correct, a high-power water-immersion objective will stand a $\frac{9}{10}$ condenser cone, without glare, on a well-stained object.

8. The water-immersion objective is specially suited for preparations under large covers (20 by 50 millimeters or so)

which require much searching. If all covers are measured and the thickness marked on each, the water-immersion objective gives less trouble than an oil immersion; especially if only covers between 0.16 and 0.17 millimeter thickness are used.

9. The water immersion is an objective for the experienced worker only.

CHAPTER XIV

MIRROR, STAGE, NOSEPIECE, AND DRAWTUBE

The Mirror.—The concave mirror is doubtless out of date on the standard high-power microscope, and should be abandoned, in the writer's opinion, when a condenser is fitted. It is still useful, however, on the Greenough binocular, and for objectives with apertures below 0.3. An aperture of 0.3 (or slightly more) in the mirror is too much for the ordinary Greenough, with objective apertures about or below 0.1; and hence the apertures of some mirrors require, as has been already stated, to be cut down, to produce the most distinct vision. (The concave mirror gives a larger side to side than back to front aperture.) But a cone of 0.3 is better given by a corrected dry condenser than by a concave mirror; or by the same water-immersion condenser of aperture 1.25, which is used for the highest powers; if the condenser is, as it should be, of sufficient focal length to give a large enough image of the strongly illuminated part of the ground-glass disc for the 10 objective.

The plane mirror, in the writer's experience, usually gives two fairly strong extra images, besides the normal one; and this is somewhat prejudicial to correct focusing of the condenser, and must cause some glare. According to Dallinger (43) and Coles (46) by rotating the glass, the three images of the edge of the lamp flame may be placed in a back and front line, but this is no advantage with a circular source diaphragm. A right-angled triangular prism, with total reflection, yields only one image, and so reflects more light than the mirror. Such a prism, with two equal sides, is equivalent to a thick glass plate with plane-parallel sides; and so is not affected with the ordinary chromatic aberrations, and produces only a slight spherical

aberration on nearly parallel rays. (Dallinger used the reflecting prism with good effect.) With ordinary care as to centering with the lamp, a 25-millimeter prism can be used without reducing the condenser aperture, but a 30-millimeter prism is doubtless more error proof. Such a prism can be used when the incident light is at right angles to the first surface, and also when it falls more obliquely still to the axis of the microscope; but, with lessened obliquity, the reflection is total only for a range of a few degrees. In actual use, with the source 25 centimeters away and about 20 centimeters high, and the instrument inclined at about 35 degrees, the reflection may be always total. If it is not total with the microscope vertical, the lamp can be lowered. When a vertical microscope, however, is regularly used, the reflecting side of the prism should be silvered. The writer has used a well-made 25-millimeter prism instead of a mirror for five years of daily work, with satisfaction. Hence, the plane mirror need not be retained on the best research microscopes, but may well be replaced by a prism.

With a small diaphragm on the source of light, the centering of this spot of light by moving the mirror or prism requires to be done repeatedly. If the lateral and central pivots moved in sleeves, more ease and greater accuracy would be attained in this adjustment.

When a good condenser is used, there is no need in ordinary work to swing the mirror or prism bodily from side to side; nor is there need to shift the mirror or prism up or down. It should be fixed centrally on the tailpiece. In the absence of a concave mirror on the reverse side, the lack of centering of the prism or plane mirror, described by Coles (46) and usually found, should no longer exist; and the plane of the mirror or the prism base can be properly centered with the optic axis. The centering of the ordinary plane mirror, as now fitted, is usually improved by shortening its stem 3 or more millimeters.

The Stage.—By use of an ordinary sliding bar on a square stage, in the absence of a mechanical stage or object

traverser, preparations under medium or large cover-glasses can be systematically searched through; which is not easily done if there are only spring clips on the stage. The writer has used the Detto sliding bar on the round stage for several years in place of a screw mechanical stage, and it gives satisfaction if kept free from balsam or immersion oil. When the condenser is water immersed, the glass slides can be "floated" on a thin layer of water on the stage, so as to run without friction, and this cannot usually be done with a screw "object traverser." A detachable mechanical stage, or "object traverser," however, is of use to most workers, especially for the slight movements necessary to get an object in the right position. Many makes are available, and improvements have been suggested in the *Zeitschrift fuer wissenschaftliche Mikroskopie* for 1926. The up-and-down motion should be kept tighter than the to-and-fro motion (Zeiss). An important use of the mechanical stage is to act as a finder, by enabling the latitude and longitude of particular points on the slide to be found and recorded. But this may be done by simpler methods (see Chap. X, page 109).

In some mechanical stages the movable piece supporting one end of the slide bends in far enough to take a wider slide than 25 millimeters. If only standard slides are used, this piece may be, for ease of working, cut shorter with a triangular file.

The Nosepiece.—A revolving nosepiece is necessary for the professional microscopist, and the more objectives that can be put on it at once, the better. Four objectives may be needed constantly for some work. The makers of the instrument will center the low and medium objectives on the nosepiece, so that they register fairly accurately with the high objective (see Fig. 10). In this case, one can sometimes do without large centering screws on the condenser sleeve, presuming that this sleeve also is accurately centered; as it is by the best firms. The writer has one instrument with a large centering condenser sleeve (Baker), and another with a well-centered sleeve (Zeiss) which can

be adjusted by small screws and a screw driver; and can find no difference in accuracy, but the former is more troublesome. Long-focus condensers alone were used, however. (With short-focus condensers, or with some dark-field condensers, like Nelson's Cassegrain, a special centering sleeve is doubtless necessary.) If the objectives have been bought separately from the nosepiece, however, the low powers may not be quite concentric with the high powers. It is, of course, well in this case, as Coles (46) points out, to vary the position of the series of objectives on the nosepiece until the best results are attained, when the position of each is to be marked. Zeiss now makes a centering ring, which can be put on each objective, for especially accurate work.

The accurate centering of the objectives is so important that a practiced microscopist may sometimes have to do it for himself. In some nosepieces there are laterally centering devices for each objective. In others there are adjustments for the whole nosepiece which is made true throughout, and the objective shoulders are also made true. In nosepieces of the latter type, the final adjustment for each objective is done (by the optician), presumably, by grinding the meeting surfaces to the correct plane. The microscopist can proceed in the following way: first, test the centering, with and without the nosepiece, of a high-power, oil-immersion objective which gives optimum images. If the centers are the same, the nosepiece is correct; if not, the nosepiece must be adjusted by the maker or by the skilled user. (The bearing surfaces of the objectives must be clean.) With a correct nosepiece, all low and medium objectives can be made to register with the high oil-immersion objective by putting a thin film of cellulose varnish or gum arabic at the right place on the objective shoulder, and polishing it down to the exact thickness required.

In the writer's experience, "parfocal" objectives are not necessary for high-power work, for the high objective is always raised before rotating the nosepiece.

According to Messrs. Watson (130), the nosepiece should always be turned round in the same direction, to wear well. In Zeiss's nosepieces, this direction appears to be counter-clockwise, seen from *above*. If there is any shake in the spring catch at the centering point, the nosepiece should be cleaned or repaired; for a wrongly centered objective is a cause of poor images. Slight shifting of the spring catch in some nosepieces may throw all objectives out of center. Centering of the objective is of prime importance for good work. In some nosepieces, probably through wear, or through screwing up too tightly, the objectives may over-ride the catch slightly and require to be brought back by reversing the rotation. Otherwise, definition is injured.

The sliding objective changers of Zeiss, as already indicated, are a good substitute for the revolving nosepiece, in the hands of the experienced worker. They require no more time to change than do eyepieces.

Occasionally, the grooves of the nosepiece, where the spring catches, should be freed from the dust which accumulates there. It is advisable that the objectives should not be unscrewed from the nosepiece except to clean the back lens; and the microscope, with attached objectives, is best kept under a bell jar with a vessel of fused calcium chloride.

The whole of the work of the microscope depends on the accurate centering of objectives on a good nosepiece; and the best possible one should be procured (Coles). The objectives, when once centered, should of course be retained in the positions marked for them.

The Drawtube.—If the objective has a correction collar, as all high dry and water objectives should have, the drawtube is not needed; except to set the mechanical tube length at 160 millimeters (or 170 millimeters with some makers), measured from the shoulder of the objective screw to the top edge of the tube. Even 1 millimeter wrong sometimes is perceptible with high-apertured objectives of long focus, and 3 millimeters may decidedly mar the image with some objectives. The tube length as

marked on the tube should be compared with a scale; for some optical firms do, and some do not, allow in the numbering of the divisions for the presence of a nosepiece. The first thing to do on setting up a microscope with a drawtube is to put the tube length at 160 or 170 millimeters (according to the maker). This task is avoided if the drawtube is omitted.

Use of the Drawtube.—In the preparation of slides (in iron-acetocarmine) the writer has used an 11-millimeter objective of 0.35 aperture. It gave poor images with the uncovered preparations, but when the tube was pulled out for about 2.5 centimeters more, the picture was sharp. The excellent apochromatic 20 (8 millimeters) gives poorer definition with covers which deviate 0.02 from the standard thickness of 0.17 millimeter; but can readily be adjusted by extending the tube length about 2 millimeters for each 0.01 in deficit of the cover. But the dry 40 (4.3 millimeters) of 0.85 aperture, a fluorite objective, as already stated is most sensitive to differences in the thickness of the cover-glass, or mounting medium. Measuring the cover, and increasing the tube length about 10 millimeters for every 0.01 millimeter below the standard cover-glass, gives good results. When a $1/12$ oil immersion is employed on objects in water, the pulling out of the tube for an appropriate distance (usually up to 10 millimeters) improves the vision of objects which are slightly below the cover-glass. The 3-millimeter oil-immersion is corrected by shorter increase of tube length than the 2-millimeter oil. (The 2-millimeter dry, on the other hand, according to the maker, is not perceptibly affected by the ordinary changes of tube length, and cannot thus be corrected for different cover thicknesses.)

In the correction collar, the back lenses are moved closer to the front lenses for thicker covers, and moved farther away for thinner covers; just as the eyepiece is moved closer to the objective for thicker, and farther away for thinner covers, when the drawtube is used for the correction. Thus for thicker covers the front lens of the

objective, when the microscope is again focused, comes farther from the cover, and the magnification (and spherical correction) is diminished; and *vice versa*. By adding an amplifier, which is a corrected concave doublet, behind an objective, the rays would be brought to a focus farther from the object, and if the objective is raised enough, can be focused at the standard tube length, causing an increase of the working distance and a correction for a thick cover. The homal is an amplifier used for projection at a distance, and is so made as to also flatten the field; giving a magnification, on the screen, in the Phoku camera, of 5 or 4.7. (A homal of lower power is now made for low objectives.) For low and high apertures and foci, the amount of flattening required is different. These homals are used by Siedentopf in the new photographic attachment. A concave achromatic amplifier is also used in the binocular attachment of Siedentopf (and others); and should be so arranged that the object, when centered on the monocular, would still be centered when the eyepiece is removed and replaced by the binocular attachment. Such an amplifier was used by Van Heurck with high powers without injury to the images, presumably the markings of diatoms.

Nelson (46) mentions the importance of a diaphragm in the drawtube, 14 millimeters in diameter, and about a centimeter below the longest eyepiece. This improves the image by cutting off light reflected from the inside of the tube. If the source of light is diaphragmed so that its image is equal to the size of the field of view, however, there is little extraneous light to be reflected from the sides of the tube into the eyepiece. Nevertheless, such a diaphragm might well be inserted, since it costs little trouble, and is useful with a large source of light; and many little things, each of which improves the vision almost imperceptibly, add up and make a perceptible total.

A rackwork on the drawtube would be of advantage to one who uses high dry objectives without correction collars, or who regularly uses the 8-millimeter apochromatic

on covered and uncovered objects, as in Coles's method of viewing bacteria, blood parasites and spirochætes (46). The absence of a drawtube in the binocular can be remedied by the use of high dry or water-immersion objectives furnished with correction collars. Oil-immersion objectives (46) frequently require slight correction by the drawtube for thicker and thinner covers, since the hard crown glass of the cover has a slightly higher refraction than the thickened cedar oil. This may be obviated by using covers of 0.17 millimeter thickness regularly. One disadvantage of altering the drawtube is that it alters the height of the eye. Of course, it also alters the magnification. For purposes of comparative measurement of chromosomes, etc., objectives must be used that do not require a correction collar, and do not require alteration of the tube length. That is, the covers must be of standard thickness, which it requires special care to ensure. When any object is drawn or photographed under the water-immersion objective, a note of the position of the correction collar is required so that the magnification can be calculated. Changing the tube length when the Abbe drawing camera is used, doubly alters the magnification, for it increases or decreases the distance of the ocular from the objective, and also from the drawing surface. Thus changes of tube length are best avoided by using covers *of the standard thickness.*

Summary.—The concave mirror has not been required by the writer on the standard microscope. Its use seems mainly limited to the Greenough binocular. The plane mirror should be fixed in a central line below the condenser. The plane of its surface should pass through the optic axis when turned parallel to this axis. To attain this its stem usually requires shortening. It may be advantageously replaced by a 25- or 30-millimeter reflecting prism, silvered on the reflecting surface, if necessary.

The sliding bar with clips on the square stage is useful for searching, as is also the Detto sliding bar on the round stage. A screw object traverser is necessary in many

cases, but this does not always need to be fitted with verniers and scales.

The revolving nosepiece should be kept accurately centered and revolved only in the right direction. The high objectives should each be centered fairly accurately, and the low objectives should be made concentric with the high ones. Lack of centering of the high objectives is one of the worst errors of microscopy, and spoils all images, more or less.

The drawtube is doubtless unnecessary on instruments for routine work, and it may be a source of errors of adjustment. Its use may be avoided by employing cover-glasses of standard thickness. A 14-millimeter diaphragm, 1 centimeter below the lowest eyepiece is always useful with a large source of light (Nelson). A drawtube is handy on both monocular and binocular *for the most accurate adjustments*, in the absence of correction collars. Such corrections may often be made, however, by pulling out the eyepieces more or less. No correction by the drawtube is quite equal to the use of the correct cover thickness.

Practical Points

1. Use a corrected condenser for apertures above 0.2, instead of a concave mirror.

2. For high-power work, the glass plane mirror may well be replaced by a silvered reflecting prism, which gives only one image of the source.

3. The reflecting surface of prism or mirror should be centered with the optic axis, and the source of light should be central, too. This is especially needful with a 25-millimeter prism, and a high objective.

4. A sliding bar on a square stage enables slides to be systematically searched, or the Detto sliding bar may be used on a round stage.

5. An object traverser (mechanical stage) is useful for searching, and as a finder; but the scales and verniers may often be dispensed with.

6. A revolving nosepiece for several objectives is essential for rapid work, and must be kept accurately centered.

7. The low objectives in the nosepiece should be made fairly concentric with the high ones, which must be accurately centered. If not, all images are impaired. Special centering rings are now available. Sliding objective changers make centering easy.

8. When the objectives are properly concentric, and with a small diaphragm on the source of light, the high objectives can be focused down on the circle of light (on the object), instead of being focused up.

9. The tube length should be accurate to within 1 millimeter with oil-immersion objectives.

10. Pull out the drawtube an appropriate distance with uncovered objects for the 16-,11- and 8-millimeter objectives, (and also for the oil-immersion objectives).

11. These three dry objectives, and especially the 4.3-millimeter dry objective, and also the oil-immersion objectives, can be adjusted by the drawtube for the usual differences in cover thickness (or the eyepieces can be pulled out, on the binocular).

12. With oil-immersion objectives used on objects in water, also pull out the drawtube sufficiently.

13. Put a diaphragm of about 14 millimeters in diameter in the drawtube well below the eyepiece especially when the source of light is large (Nelson).

14. For most routine work, have the drawtube fixed permanently at the right length by a special screw, or use an instrument without drawtube. Correct covers are better than correction by drawtube.

CHAPTER XV

THE EYEPIECE

Kinds of Eyepiece.—The eyepiece receives narrow beams of only slightly converging rays, and hence does not need, and cannot receive, such important corrections as the objective requires. In the ordinary Huyghenian eyepiece (with field lens below the diaphragm), the curvatures and positions of the two simple plano-convex lenses correct sufficiently the chromatic and spherical aberrations for low- and medium-power eyepieces, for one lens acts on the pencils before and the other after the rays cross, and the errors cancel. In the higher Huyghenian eyepieces (12.5 or higher, by the new designation), however, the eyepoint is too close to the upper lens (eyelens). This is remedied in the special higher eyepieces (orthoscopic, etc.) without a field lens, made of a correcting triplet and an eyelens; which are useful with achromatic objectives having apertures less than 0.65. Also, by making the eyelens of the Huyghenian eyepiece a doublet, certain corrections for flatness of field and color can be introduced (periplane, hyperplane or planoscopic eyepieces).

In the construction of apochromatic objectives, an error in the difference of magnification for different colors is usually best left to the compensating eyepieces for correction. This correction is made in a doublet for the eyelens in the lower eyepieces (with field lens), or by a triplet combination in the higher eyepieces (without field lens); so that the exit pupil is always well above the eyelens. (In the excellent new 10-times compensating eyepiece of Zeiss, the field lens is also a doublet.) Because of the high eyepoint, the 15- and 20-times compensating eyepieces are comfortable to look through, though the new 15 eyepiece may have too high a fitting for spectacle wearers. Com-

pensating eyepieces must be used with most series of apochromatic objectives for the best results. Since the high-power achromatic objectives also have some of the same error uncorrected, the compensating eyepieces can be used with them with advantage, especially with a yellow-green screen. If yellow-green screens are used constantly, compensating eyepieces can be employed with low and medium achromatic objectives also, so as to avoid changing eyepieces. Or the 10 apochromatic objective may be used with medium and high achromatic objectives. The compensating eyepieces and apochromatic objectives of different makers should not perhaps be used in combination, for it seems that the corrections are sometimes perceptibly different. Eyepieces giving a variable degree of compensation were calculated by Hartridge (72). One maker (Watson) has eyepieces with a flint field lens and crown eyelens, and the compensation can be varied by varying the distance between the two. For photography, the aperture of the cones of light at the light sensitive plate is so small that the differences between compensating eyepieces, periplane or hyperplane eyepieces, and the special projection eyepieces are small. Every small advantage counts, however, in scientific photography, and for optimum results the special projection eyepieces, or the homals, are to be used. Since flatness of field is sometimes of importance for a photograph, the homal diverging photographic eyepieces, which are calculated especially for this, are the best for cases which demand such flatness.

Optimum Use of Different Eyepieces.—1. For low and medium achromatic objectives, use Huyghenian eyepieces up to 10 times, and orthoscopic eyepieces (Zeiss) from 12.5 to 28 times. (With yellow-green light, plane or compensating eyepieces may be sometimes used.)

2. For high-power achromatic or fluorite objectives, use *plane* eyepieces (periplane of Leitz, hyperplane of Bausch and Lomb, and planoscopic of Spencer); or *compensating* eyepieces, especially with yellow-green light.

3. For all apochromatic objectives, use compensating eyepieces (Zeiss, Bausch, Spencer, Watson), or holoscopic eyepieces (Watson), or periplane eyepieces (Leitz).

4. For optimum photography use either projection eyepieces (Zeiss) or homals (Zeiss).

Since the writer regularly uses no eyepiece lower than 12.5 times, he finds the compensating oculars of 12.5, 15, and 20, with high eyepoints, best; and to avoid time spent in changing, he employs them throughout, with yellow-green glass, even for low and medium achromatic objectives.

Changing Eyepieces.—Eyepieces are probably in some cases changed too frequently. With three or four objectives on the nosepiece, there should be little necessity for frequent changing of eyepieces; if a large cone of light is used, and eyepieces not too much below the maximum useful magnification are selected. If the 10 (or 20) apochromatic objective is procured, the excellent compensating eyepieces, with high eyepoints, can be used with all the higher objectives, whether achromatic, fluorite, or apochromatic. Where eyepieces are "sprung in," as in Zeiss's excellent binocular, an occasional wiping of the bearing surfaces with alcohol-moistened filter paper, or the application of vaseline, will make their withdrawal easy. The right-hand eyepiece may require to be pulled out, to examine the back of the objective, at each change of objectives.

Magnification.—The standard magnification of the eyepiece is now reckoned as the magnification given by the eyepiece to the image which is, or would be, formed at 180 millimeters (or less) from the objective. The virtual image is supposed to be located at 250 millimeters from the eye. The old method of reckoning gave the magnification of the objective as 250 millimeters, divided by the focal length of the objective in millimeters; instead of about 180 millimeters, divided by the focal length, as at present. On the other hand, the old eyepiece magnification was 180 millimeters (or so) divided by the focal length of the eyepiece; instead of 250 millimeters divided by the focal length, as at present. Since the focal length of the achro-

matic objective, was, as already stated, sometimes given too short, this would result in wrong figures for the magnification of the eyepiece, if found by dividing the total magnification by the calculated magnification of the objective. (For the lower powers of objectives, however, the optical tube length is below 180 millimeters, because of the lesser distance of the posterior focal plane from the image.) The designation of objectives and eyepieces by their magnifications avoids these discrepancies, especially in the apochromatic series; and this is why its introduction is favored. In the Huyghenian pattern, the fieldlens reduces the image, and the eyelens alone magnifies. Hence, in this form, the magnification of the whole eyepiece is less than the magnification of the eyelens alone. It has already been pointed out that the chromatic and spherical errors are mainly corrected by this construction, which shows that achromatic combinations can be attained otherwise than by a convex lens of crown combined with a concave lens of flint. In the higher compensating and orthoscopic eyepieces, however, where a triple lens and a single lens are close together, both act as a compound magnifier and, hence, can be larger than if they had also to make up for the diminution produced by a fieldlens, or if only one lens were used. Hence also the eyepoint is well above such a larger eyelens.

Eyepieces should be parfocal; for, if not, the focus must be changed with every change of eyepiece, thus altering the magnification of the objective and the optical tube length. A collar of appropriate depth ensures this condition. Hence, a series of oculars not parfocal should usually be rejected for scientific work.

The eyepiece circle (Ramsden circle, or exit pupil) should be in or near the plane of the pupil of the eye. Since there are the cornea, eyelashes, and perhaps spectacle glasses between these two, the need of eyepieces with fairly high eyepoints is apparent. If the pupil of the eye is too much above the eyepiece circle, the field of view is bounded by this circle (instead of by the eyepiece dia-

phragm), as in a high Huyghenian eyepiece. On the other hand if the pupil of the eye is too far below the eyepiece circle (which can only happen with a large eyelens to the ocular), the iris of the eye bounds the field.

Eyepiece Constant.—The constant or basic number of an eyepiece is the total magnification of the microscope multiplied by the actual diameter in millimeters of the field of view *on the object.* Since this expresses the apparent size at 250 millimeters of the diaphragm of the ocular magnified by the eyelens, it is the same with any one eyepiece for all objectives. When once determined, it can be readily used to measure the total magnification, by observing an object micrometer. This is one of the easiest ways of measuring magnification.

Diaphragm.—The diaphragm of an eyepiece determines the size of the field of view, to which the lighted area of the slide should usually correspond as nearly as possible. In the case of a binocular, the diaphragms of the two eyepieces should correspond in apparent size. This can easily be attained by slightly shifting one of them, if necessary, in the eyepiece tube. Myopic observers will not focus the edge of the ocular diaphragm unless they wear distance spectacles. (Astigmatic eyes also must, of course, as already noted, retain their correcting glasses when using a microscope or magnifier.) The corrections of the eyepiece, like those of the objective, are improved by the use of yellow-green light.

Measuring Eyepiece.—The measuring eyepiece, with a scale on glass supported by the diaphragm, is usually necessary when large numbers of measurements have to be made. It is important that the same side of the glass circle containing the scale should be turned upwards during a series of measurements, because of the different thicknesses of the glass disc and its balsamed cover. It is easier to make a large series of measurements if the disc is movable by a lateral screw. A probably more accurate method of measuring is to draw both the object and an object scale (stage micrometer) with the Abbe drawing

camera. Another accurate method is to photograph both on the same plate. In all such measurements the mechanical tube length should be 160 (or 170) millimeters, if possible. In making a series of measurements with an eyepiece micrometer, the tube length is often previously altered to make a certain number of divisions of the eyepiece scale coincide with a definite number of divisions of the object scale. If these numbers are properly chosen, little shifting of the tube length is necessary. Even this can probably be obviated if the actual size of the divisions of the eyepiece scale is known, as well as the diameter of the eyepiece diaphragm. To get the magnification of an objective, use an eyepiece scale of known intervals, in an eyepiece which has the diaphragm below the lenses, along with a stage micrometer. The magnification of the objective is equal to any extent of the eyepiece scale divided by the coinciding portion of the object scale.

Summary.—A high eyepoint is important, especially for wearers of spectacles. Eyepieces with small eyelenses and close eyepoints are especially to be avoided by those who need spectacle glasses. The 10-times compensating eyepiece of Zeiss, for example, has a comfortably high eyepoint. The higher compensating and orthoscopic eyepieces with external diaphragms have large eyelenses and high eyepoints. Compensating eyepieces can be used with all achromatic objectives (with the lower as well as with the higher powers) if a deep-green screen, such as Wratten No. 58, is also employed. All eyepieces by the same maker should be parfocal, or the tube length is not kept constant. Eyepieces by different makers may not agree in position of the focal plane and, hence, should be perhaps restricted to their own objectives.

Practical Points

1. Have a special corrected eyepiece (orthoscopic) for ocular magnifications much over 10, when achromatic objectives of low and medium power are much used.

2. Use compensating (or *plane*) eyepieces with achromatic objectives of apertures of 0.85 and over.

3. Employ compensating eyepieces of the same make as the apochromatic objectives used with them.

4. Get all eyepieces parfocal.

5. Use specially corrected eyepieces for photography, either the projection oculars, or the homals.

6. For flatness of field, special photographic eyepieces have been designed (homals).

7. Change objectives rather than eyepieces, as a rule.

8. Use the new method of designating eyepieces and objectives by their magnifications.

9. For long-continued work it is best to have the measuring eyepiece provided with a screw to move the scale.

10. Accurate measurements can be made by photographing, at once or successively, both object and scale.

CHAPTER XVI

MICROSCOPE OUTFITS

On Labor Saving in the Use of the Microscope.—The microscope outfit should be chosen with a view to labor saving; for whether it is to be used in routine work, or in research work, saving of time is of value. Work with the microscope usually requires much preliminary attention to the dissection, fixation, sectioning and staining of objects; so that limited time is available to attend to the instrument itself. Time may be saved by the following methods, among others.

1. Have microscope, screens, and lamp permanently centered at the right distance, along a straight line marked on the table, or on a board (Coles). It would save time if the microscope was fixed in place by screws.
2. Have the diaphragms on the source of light pivoted so as to be readily turned into place.
3. Use the same bright-field condenser throughout, so as to waste no time in changing condensers for low, medium, or high objectives.
4. Have a series of yellow-green glasses to moderate the light, and to serve also as color screens.
5. Have the stop for the condenser sleeve always arranged so that when the condenser is screwed or racked up to the limit it will nearly touch the slide.
6. Use water immersion (not oil) for the condenser (xylol may be employed occasionally).
7. Have the condenser centered with the highest objective, by a simple centering sleeve which can be adjusted once for all and is not likely to get out of order. Usually only a few tenths of a millimeter adjustment will be wanted.
8. Use only slides of 1-millimeter thickness, within a range of 0.1 millimeter. These can readily be obtained.

Their use saves much time, with the dry condenser especially.

9. Have cover-glasses previously measured by the screw gage, and 0.17 millimeter thick, for important objects. This saves the time needed for adjusting tube length.

10. Have the objectives made as accurately concentric as possible on the revolving nosepiece, so that the field requires a minimum of shifting on changing powers. This is important for quick work.

11. Have a revolving nosepiece which takes in all the objectives required, so as to avoid unscrewing, and to allow of accurate centering of each objective. Three or four objectives are enough for most work.

12. Use a mechanical stage without scale and verniers for most biological work. There are quicker ways of finding objects than with scales and verniers.

13. Time may easily be wasted in testing objectives. If an objective stands a $\frac{9}{10}$ cone without glare on stained objects with accurately adjusted condenser, and gives good definition with the calculated maximum useful eyepiece magnification (such as 12.5 for the 100 fluorite objective, and 15 for the 90 apochromatic), it does not need testing, if it is accurately centered.

14. The use of water-immersion objectives saves time otherwise spent in cleaning covers from immersion oil, when going over slides with large covers, with objects in watery fluids or iron-acetocarmine.

15. The disuse of cover-glasses with short-bodied oil-immersion objectives used on smears, etc., may save much time.

16. Changing eyepieces may waste time, and may be reduced to a minimum; for one optimum eyepiece can often be used throughout.

17. Altering tube length wastes time, and a fixed tube length is often best for routine work, cover-glasses being measured previously.

18. Time may be saved by using a 50 or 60 oil-immersion objective of low aperture and longer working distance, where the full power of the 90 or 100 of 1.3 aperture is not necessary.

19. Time is saved by the use of the binocular microscope instead of the monocular for long-continued work.

20. Covering the microscope (like covering the typewriter) saves time in cleaning, dusting and repairing.

Necessary Apparatus for Optimum Work.

1. A binocular microscope, or a monocular with binocular eyepiece attachment, is needed for long-continued work.

2. A powerful electric lamp with a disc of ground glass and a circular diaphragm of about 3 millimeters (for high objectives) is required. A Pyrex low-voltage lamp with tungsten ribbon is good.

3. Yellow-green screens (Wratten), such as Nos. 66, 56, and 57A are required on the binocular.

4. A 25- or 30-millimeter silvered reflecting prism is useful instead of a plane mirror.

5. A water-immersion aplanatic achromatic condenser of 8.5 to 12 millimeters focal length and 1.25 true aperture, corrected for lamp at 25 centimeters and slides 1.0 millimeter thick, is essential. A similar *dry* condenser is suited for routine work.

6. A stock of cover-glasses, 0.16 to 0.17 millimeter thick, is much to be desired; and slides 1.0 millimeter thick must be used for optimum results.

7. Necessary achromatic objectives are the 10 of 0.3 or less aperture (or, better, the corresponding apochromatic) and the 100 fluorite; as well as, in some cases, the 90 water-immersion objective of 1.2 aperture, with collar. A 12.5 pair of compensating eyepieces is best with these two high-power objectives. Objectives 20 of about 0.4 aperture, and 50 oil-immersion of nearly 1.0 aperture, are useful for routine work.

8. Apochromatic objectives regarded by the writer as best are the 10 of 0.3 aperture and the 60 oil-immersion of 1.3 (or 1.4) aperture used with compensating eyepieces

20. The 70 water-immersion of 1.25 aperture, and the 90 oil-immersion of 1.3 (or 1.4) aperture, used with compensating eyepieces 15, are also good. The 20 of 0.65 aperture and the 60 of 1.0 aperture are excellent for routine work.

9. A triple or quadruple nosepiece with the objectives fairly concentric when in their right places is essential, unless sliding objective changers are used.

10. For research (or routine) work without cover-glasses, most of the above objectives can be had from a metallurgical series of short-mounted objectives (Zeiss, Leitz); an appropriate collar, to replace the vertical illuminator, having been added to the microscope. A centering collar can be used on each objective on a double or triple nosepiece.

Suggested Microscope Outfits for Optimum Work. (*A*) *Routine Microscope for Covered Objects.*—Lamp frosted inside (C Mazda), with 3-millimeter, and larger, diaphragms. Wratten screens Nos. 66, 56, and 57A. Binocular. Silvered 25- or 30-millimeter reflecting prism. Dry achromatic condenser, corrected for 25-centimeter lamp distance and 1.0-millimeter slides. Supply of 1.0-millimeter slides. Supply of covers, 0.16 to 0.17 millimeter thick. Apochromatic objective 10. Achromatic objectives; dry 40 of 0.85 aperture, with collar, or 50 (or 60) oil immersion of 0.85 to 1.0 aperture, and 90 oil-immersion objective of 1.25 aperture. Eyepieces; compensating, 12.5. Achromatic magnifying lenses, 3 or 4 times. Triplet magnifier, 6 times. Screw gage for covers and slides.

(*B*) *Routine Microscope for Uncovered Objects.*—As in (*A*), but metallurgical objectives, with a collar of 30 millimeters (or other right length) inserted above the nosepiece (to replace the vertical illuminator, and so give the right tube length).

(*C*) *Microscope for Achromatic High-power Objectives.*—Same as (*A*) or (*B*), but with low-voltage high-power lamp with ground-glass disc, water-immersion achromatic condenser of 1.25 aperture, corrected for lamp at 25 centi-

meters and slides 1.0 millimeter thick. Objectives; apochromatic 10 (and 20) achromatic 90 water-immersion (or oil-immersion of 1.0 or less aperture), and 100 fluorite oil immersion. Compensating eyepieces, 12.5. (This microscope may also be used for uncovered objects with metallurgical objectives in short mounts.)

(*D*) *Microscope for High-power Apochromatic Objectives.*—Same as (*C*), but (instead of achromatic objectives) high-power apochromatic objective, 60 of 1.3 aperture or 60 of 1.4 aperture, with 20 eyepieces; or 70 water immersion of 1.25 aperture (or 60 oil-immersion of 1.0 aperture), and 90 oil-immersion of 1.3 (or 1.4) aperture, with 15 eyepieces. (This microscope may also be used for uncovered objects, with objectives specially corrected, and in short mounts.) It may be suggested, for optimum work, that, especially for objectives in short mounts, a triple nosepiece with three of Zeiss's objective centering rings (15 millimeters long) will allow of accurate centering.

Special Preferences.—The above are combinations of apparatus which may not yet wholly exist. Certain objectives, etc., favored by certain research workers may be noted here; though, in some cases, they may but have made the best of what chance put in their hands. Thus Coles, for instance, preferred a 1.6-millimeter fluorite objective to a 2-millimeter apochromatic, for observing and photographing spirochætes and other minute blood parasites. He used yellow-green screens. An American research worker on minute insect chromosomes used a high dry apochromatic objective with a correction collar in examining his balsam mounts of sections, and so avoided having to clean his covers every time he changed from the finder to the high-apertured objective. Another American worker, who specializes on chromosomes of vertebrates, used a particularly good 1/12 Bausch and Lomb achromatic oil-immersion objective; and employed a low compensating ocular magnifying only twice, for searching with this objective, instead of using a low-power dry objective. The writer of this book avoided soiling his covers by using

an apochromatic water-immersion objective for much of his chromosome work on objects in acetocarmine. Coles used, as already stated, as a finder, an apochromatic 8-millimeter objective, with dark field, on stained films mounted dry. A celebrated authority on cells and chromosomes used a 1.5-millimeter apochromatic objective for most of his work of observation, drawing, and photographing. For measuring and observing chromosomes, the writer prefers (for several advantages) the 3-millimeter apochromatic oil objective 60 of 1.3 aperture, with an eyepiece magnifying 20 times. It is evident that different workers have different judgments. In fact, all modern objectives, achromatic, fluorite, or apochromatic, are so good when accurately centered that good work can be done with all; and the real differences which exist are slight, and often only noticed by the skilled worker.

Moderating the Light.—All microscope outfits should include means for moderating the light. The chief need for much moderating of the light comes from the changing of eyepieces. If eyepieces are kept so that the total magnification is about 750 to 1,000 times the working aperture, then the need for light moderating is confined to the change of objectives, and is slight. Of course, the light should not be decreased by lessening the aperture of the condenser. The writer does all the light moderating usually necessary (using a binocular) with the three yellow-green Wratten screens, Nos. 66, 56 and 57A, used singly or two together, with a 108-watt tungsten-ribbon pyrex lamp, and ground glass. Light moderating is an important factor in securing the largest possible cone from the condenser, without flooding or glare. It should not be forgotten.

Improving Existing Outfits.—If the reader cannot get an ideal outfit, he can yet improve his microscope in several ways. First, and best, he can get covers 0.16 to 0.17 millimeter thick. This will improve all images. If he has only an uncorrected condenser, as is perhaps probable, since this has been the fashion since Koch's use of it in 1878; then he can use a small electric lamp close below it, with

a flat double-ground glass near the iris of the condenser (Hartridge). But he should replace this condenser, if possible, by a dry long-focus achromatic condenser giving large images (Leitz, Zeiss, Spencer, Watson). In this case he should use an electric lamp at the proper distance, with a double-ground glass disc (or two singly ground superposed), and a diaphragm in front of it. A yellow-green light filter will markedly improve his achromatic objectives. The use of the oil-immersion objective of 3.5-millimeter focus, and 0.85 aperture (or other similar objective), is of service in some cases where the 2-millimeter (or the 1.8-millimeter) objective is used; and the former objective is more comfortable to work with. Finally it may be recommended that, however experienced the microscopist, the compensation of the unoccupied eye by a disc of ground glass may add to his comfort when using the monocular.

Summary.—For careful routine work, the writer recommends the use of a dry achromatic condenser corrected for 25-centimeter lamp distance and 1.0-millimeter slides. It is also thought that the low oil-immersion objective of 0.85, or somewhat higher, aperture may often replace the dry 4-millimeter objective with better results. A screw cover-glass gage should be available, and only No. 1 covers should usually be obtained. Covers of 0.17 millimeter should be put on important objects. For routine and research, the monobjective binocular is unsurpassed. For research, the use of yellow-green light, and a corrected water-immersion condenser giving at least a cone of 1.2 aperture, is dwelt on. Water-immersion objectives are regarded as worth using with objects in water. It is usually best to replace the plane mirror by a prism. The use of the apochromatic objective 60, of 1.3 or 1.4 aperture with eyepiece 20, has some advantages over the usual use of the apochromatic 90 with eyepiece 15.

CHAPTER XVII

DRAWING

Use of the Abbe Camera.—A camera lucida drawing might well be made of every microscopical object photographed, since this supplements the photograph by showing different depths. A book of microscopical drawings might be nearly as instructive as a collection of slides, and can be examined more quickly.

Abbe's drawing camera lucida is doubtless one of the best instruments for drawing objects under the microscope. It needs practice, however, to attain facility and comfort in its use. Ease of drawing depends, in the writer's experience, on the following points:

1. The eyepieces used should have a high eyepoint, such as the higher Huyghenian oculars do not possess; so compensating eyepieces are to be preferred.

2. The exit pupil (eyepiece circle) must be brought into coincidence with the middle of the aperture in the silvered surface of the small prism, both laterally and *vertically*, the latter being determined by the absence, or small amount, of parallactic shifting when the aperture in the prism is observed directly and obliquely under a lens magnifying 3 or more times. The horizontal adjustments are made by screws; and the vertical adjustment is then done by raising or lowering the apparatus on the tube, after loosening the collar slightly (or, in the new form, by turning a screw). The omission of this vertical adjustment is probably the chief cause of difficulty and discomfort in drawing. This camera should be used with a small drawing board on the right of the microscope, the board having two triangular supports, slanting it at about 35 degrees. The microscope stage is to be adjusted to the same slant. The disc of neutral glasses *under* the prism

is not needed; if there is, as there should of course be, an arrangement with the microscope for regulating the intensity of the light. The writer finds that yellow-green light in the microscope, and white light on the drawing paper are comfortable. The ring of neutral glasses round the prism must be carefully adjusted, so that the light from the drawing surface is reduced to the proper intensity. The mirror of the camera should be kept at 45 degrees, where there is usually a stop; and the object to be drawn should be put at the center of the field. A large object can be drawn piecemeal, by shifting both slide and paper, keeping the mirror at 45 degrees. Bristol board and an F drawing pencil are good. If the lead of the pencil is cut with flat facets, the pencil can be held so that one of the facets reflects the light and shows up bright in the image. When the camera is used on the monocular microscope, the left eye should be shielded by a ground-glass disc. When the drawing camera is attached to the monobjective binocular with parallel tubes, it is possible, with practice, to use both eyes with comfort. Or, as a rule, a small disc of ground glass (or ordinary waxed paper) may be put on the left eyelens.

The Abbe drawing camera can be made with a half-silvered Swan cube, in place of the Abbe cube with perforated reflector. (It is now made in this form by the Spencer Lens Company.)

Use of a Binocular Magnifier.—The writer draws only the outline and the coarser details with the camera, taking especial care to trace this outline accurately. Then he puts the card with the drawing under a binocular magnifier, amplifying three and one-half times, placed close to the right of the microscope; removes the camera, and draws in all the fine details. The drawing is then inked in under the binocular with a fine pen, and india ink. It is good sometimes to ink in strongly only the important parts, such as chromosomes, or particular chromosomes, and leave all else in outline, or merely dotted in.

Drawings for Zinc Etching.—The zinc (or copper) etching used in the reproduction of line drawings reproduces faithfully all the methods used in the old wood cuts, such as fine dotted shadings, dotted lines, fine parallel line shadings, or cross-hatchings. Hence there appears no need, as a rule, to use the (sometimes blurred) half-tones for the reproduction of microscopical drawings, and these can perhaps be reserved for photographs. In drawings, the reference letters or numerals should be small and as light as possible, so as not to be conspicuous to the detriment of the drawing. The writer dots them in, whenever allowable.

Drawings for Lantern Slides.—If lantern slides of chromosomes are required, the following method gives excellent results, and is also available for half-tones, if they are wanted. Draw the chromosomes, etc. in solid black on Bristol board with Higgins' waterproof india ink. When quite dry, apply an ordinary red rubber pencil eraser for a sufficient time to each chromosome to lower it to a half-tone. Any specially interesting chromosome to which attention is to be called can be left black.

Other Methods.—Drawings for half-tone reproduction are said to be best done with a brush and sepia (or the water color can be used in an ordinary pen).

Line drawings of microscopical objects can also be made by taking a photograph through the microscope, and making a light print; after enlarging, if necessary. This print is then made the basis for a line drawing in waterproof india ink. When quite dry, this is dipped into dilute solution of iodine, until all the silver is turned into yellow iodide. Then it is put for a short time into hyposulphite solution, which dissolves the iodide; and it is finally washed.

Microscopical drawings are readily enlarged by projecting a lantern slide made from them on to the drawing paper.

Colored Drawings.—If colored drawings are needed, the use of certain typewriter "second" paper, which absorbs the colors, is good. The colors indeed cannot be readily washed out on this paper if a false stroke of the brush is

made, but the greater ease in painting compensates for this. Then when the whole is complete, and dry, a wash with a large brush and water all over will improve the evenness of the colors.

Practical Points

1. The Abbe camera should be raised or lowered till the eyepiece circle and the opening in the silver coincide vertically.
2. Microscope stage and desk must have the same slant.
3. The mirror of the camera should be set at 45 degrees.
4. Details may be put in under a binocular magnifying about 3 times.
5. Line engravings are usually to be preferred to half-tones for scientific drawings.
6. The reference letters should be unobtrusive.
7. Line drawings may be made on light photographic prints, which are afterwards bleached by iodine solution and hyposulphite.
8. The magnification of the drawing may well be marked by projecting the virtual image of the scale of an object micrometer with the same camera on it. This has the advantage over stating the numerical magnification, that it is not made erroneous by enlargement or reduction of the drawing.

CHAPTER XVIII

PHOTOGRAPHY

Difficulties.—Theoretically, it would seem that photography should aid microscopy perhaps almost as much as it aids astronomy. Practically, this does not happen. Probably most of the important discoveries with the microscope have been illustrated by camera drawings, not by photographs. The reasons for this are: the restriction of the microscopical photograph to one plane, which makes it best suited to such objects as blood films, and smear preparations of bacteria; the waste of time entailed in setting up the microscope and camera; the usual lack of critical sharpness in the high-power photographs, except when taken with a special projection eyepiece; the time spent in making trial exposures; the use of a too low working aperture, that is, too small a condenser cone; glare through not diaphragming the source of light; and the need for increasing the contrasts in the picture.

Errors in Photography with the Microscope.—To obtain optimum photographs, certain laws of optics must be closely conformed to:

1. The distance of the objective from the object, when a photograph is to be taken, should be the same as when the object is in focus and viewed through the eyepiece (with correct tube length). This prevents any but small photographs being taken with the objective alone; for the photographic plate must be put where the image falls when the eyepiece is removed (after focusing), without altering the focus.

2. A photograph cannot be taken with the focused eyepiece *in situ* without raising the focus of the objective and so increasing the objective distance. (This may be avoided by focusing by increasing the tube length, and not raising the objective.)

3. If the objective focus is raised as in 2 (or the tube length is increased), then the eyelens functions as a camera lens, for which it was not calculated and is not particularly suited.

Methods for Optimum Photography.—The methods which can yield optimum results in photographing with the microscope are probably the following.

1. Having focused the microscope (*for distant vision*), clamp its tube in place, and center a small photographic camera, *focused for distance*, close over the eyepiece. If the camera lens is truly centered in the optic axis, the pictures should be correct. The diaphragm of the camera is not used, for the eyepiece circle of the microscope functions as diaphragm. (Metzner.)

2. Focus the microscope, and clamp the tube. Remove the eyepiece, and insert a projection eyepiece. The focusing on the camera screen may then be done by moving the upper lens of the projection ocular, which is a specially corrected photographic triplet. Thus the screen may be at any distance. Or the diaphragm of the projection ocular may be first focused on the screen, and the image then focused by the micrometer screw of the microscope.

3. Instead of the usual eyepiece, a strongly concave corrected lens (homal) is used; the tube being shortened by 20 millimeters. The photographic plate is put at (or near) the correct distance, determined by focusing the object previously with an ordinary eyepiece and clamping the tube; or fixed, once for all, in a special small camera (Phoku of Zeiss).

The projection eyepiece is used with the objective at its right tube length, and at its right working distance. But it does not give a quite flat field, which is necessary for photographs of blood films, and similar preparations. Such a flat field is given by the homals (40), a series of strongly negative compound lenses, which throw a magnified image (with a magnification of about 5 times) on a photographic plate at a given optimum distance. Siedentopf's photographic attachment screws on to the body

of the microscope instead of the drawtube (and somewhat similar miniature cameras are now offered by other makers). The appropriate homal lens is first screwed in (there being a low-power homal, one for the 10 and 20 apochromatics, and one for the high-power immersion objectives). The microscope may be kept slanted; and the light, as for observation, may come from a disc of illuminated double-ground glass, diaphragmed to equal the field of view. The focusing is accurately done (with distance spectacle glasses) by observation of an already focused scale by a lens through a side tube to which enough light is reflected by a slightly silvered prism. A graduated wedge of tinted glass is placed below the plate-holder, and a trial exposure made, preferably much too long. When this test plate is developed and fixed, an inspection gives the correct time of exposure, and a second exposure is made without the wedge. For an object with some depth, the focus can be suitably altered during exposure, the manipulator watching the alteration, meanwhile, by the side tube. Non-halation, isochromatic plates are good; and rodinal is a useful developer for these plates. The well-developed plates, after drying, may have the surface of the film cleaned by rubbing with a cotton cloth dipped in xylol.

Negatives and Prints.—Mercury intensification may be useful. These small plates may be made to give prints three to five times the size, by the use of an enlarging apparatus; or, which is often better, enlarged lantern slides may be made from them and negatives made from these. Prints may be made with developing paper after the correct time for each plate has been ascertained by trial. Over-exposed or overdeveloped prints may be made use of, after fixing, washing, and drying, by putting them in a sufficiently dilute solution of iodine, and brushing them in it, until they are just bleached enough, and then replacing them in hyposulphite. They sometimes give the best pictures.

Stains and Screens.—In the writer's experience, preparations specially stained for photography, faint yellow or

faint brown, have given the best results with the 16-millimeter apochromatic; a light-blue glass screen being used, and a vertical camera. With high powers, the Siedentopf (Phoku) attachment has given the sharpest images of iron-acetocarmine preparations with the apochromatic water immersion 70 (or the oil immersion 90 of 1.4 aperture), and a condenser cone of 1.0 to 1.2. A yellow-green screen, No. 56, was regularly used. The diaphragm on the source of light kept waste light from the inside of the microscope tube, which was not illuminated; nor was there need of the circular diaphragm provided for putting under the sensitive plate. This method also obviated the use of a wide tube, and of a black velvet lining to the tube.

Short Wave-length Photography.—The ideal of microscopical photography is to show, with blue or violet light, details invisible or poorly visible to ordinary observation with yellow-green light. The aperture is thus increased by about one-fifth. The microscopist is still far from this ideal. Only an easy method of making many photographs will allow of the necessary practice. Special objectives would seem to be needed. Probably the method of photography with ultra-violet light, giving an aperture of about 2.5, has not yet been sufficiently worked with many objects. (The ultra-violet light, however, tends to disorganize organic bodies in watery liquids.) The monobromide of naphthalin immersion with blue-violet light should give an aperture of about 2.0 for photography.

Practice in Photography.—To attain success in microscopical photography, one should start with photography at low magnifications, say, 2 or 3 times, with an ordinary camera; then use a 16-millimeter apochromatic and a projection eyepiece (or homal), and, finally, an immersion objective and an immersed condenser. (In the writer's experience, pictures taken with a 16-millimeter apochromatic and compensating eyepiece, by altering the focus of the objective, are not critically sharp.)

Type of Apparatus.—The writer subjoins an account of the apparatus he uses for photographs of chromosomes

FIG. 22.—Photograph of twelve chromosomes united in a chain or ring in *Rhoeo discolor*. Stained and fixed in iron-acetocarmine. Pollen mother cells squeezed from the cell walls. Taken with apochromatic water-immersion objective 70, and Siedentopf's photographic attachment. Enlarged on positive lantern slide, from which a negative was made.

FIG. 23.—Photograph of first-anaphase chromosomes in a pollen mother cell of *Lilium pardalinum*. Smear fixed with chrom-acetic-formalin, and stained with iron-brazilin. Mounted in cedar immersion oil. Pressed flat. Taken with apochromatic objective 90 of 1.3 aperture. Other details as in Fig. 22. This figure shows the zigzag (not spiral) bends of the anaphase chromosomes, seen only in well-fixed preparations.

in iron-acetocarmine or immersion oil, the groups being flattened out in the cytoplasm on the cover-glass, or on the slide.

Mazda-C lamp, 110 volts, 103 watts, end on, with condensing lens and ground-glass disc in front, this disc being ground on both sides and treated with magnesium sulphate. Diaphragm equalling field of view and close to ground glass. Wratten yellow-green screen, No. 56. Reflecting prism. Corrected water-immersion condenser giving 1.2 solid cone. Slides 0.9 to 1.1 millimeters thick. Covers, 0.17 millimeter. Iron-acetocarmine (or immersion-oil) preparations. Water-immersion apochromatic objective 70 of 1.25 aperture, or oil-immersion objective 90 of 1.4 aperture. Homal lens IV for high-power immersion objectives. Phoku camera with Goldberg wedge. Agfa non-halation isochromatic plates. Rodinal developer. Enlargements are made on lantern slides and negatives made from these, from which the final positives are taken (see Figs. 22 and 23).

Practical Points

1. Use a projection eyepiece or a homal negative lens, both of which are specially calculated for photography; not eyepieces which were calculated for direct vision; or add a small camera lens, above eyepiece.

2. The side tube, by which the object may be focused and viewed during exposure, is useful for quick work.

3. The graduated Goldberg wedge enables the exposure to be determined with accuracy.

4. It should be possible to take a high-power photograph in about 15 minutes, everything being replaced, and the plate developed.

5. A suitable small diaphragm on the source of light prevents fogging of the plate, and renders wide tubes and velvet lining superfluous.

6. The focus may sometimes be altered during exposure, for parts of the object at slightly different levels.

7. Preparations might well be specially stained for photography.

8. The Siedentopf and other miniature attached cameras allow of easy photography, and thus of skill gained by practice.

CHAPTER XIX

TESTING THE MICROSCOPE

Tests of the microscope are sometimes necessary; because if the lenses are not kept optically clean, and the condenser adjusted so as to give an aperture not much below that of the objective employed, the maximum useful magnification cannot be attained.

1. Testing the Light.—The electric lamp when used in the daytime is often brighter towards evening, apparently because of a temporary increase in voltage of the local current. This increase must be compensated by the use of a resistance, or a more absorbent screen than the one employed before. The intensity of the light should be lowered by screens until it is at its optimum. The incandescent ribbon or concentrated filament should be kept opposite the center of the ground glass, so that the brightest spot is diaphragmed for the high powers.

2. Testing the Ground Glass.—If ground glass is used, it should pass no perceptible amount of direct light. It can be tested, as already noted, by forming a strong image of the lamp filament on a screen by a large condensing lens, and interposing the ground glass to be tested not far in front of the lens. No trace of an image of the incandescent tungsten should be seen on the screen. To make ground glass equal to new, rub it with a saturated solution of magnesium sulphate, and dry polish this off, as already stated.

3. Testing the Yellow-green Light Filter.—This is best made of a gelatin film cemented by balsam between two plane glass plates. It should be compared with a similar unused gelatin film occasionally, to see if any fading has occurred. Wratten filters Nos. 66, 56, and 58 do not fade perceptibly in several years of daily employment, if pro-

tected from direct sunlight, and kept in a box when not in use. They *do* fade in direct sunlight.

4. Testing the Condenser.—The achromatic and aplanatic condenser must be in adjustment for (*a*) distance of lamp, (*b*) thickness of slide, and (*c*) the particular immersion fluid regularly used for it. A condenser adjusted for parallel rays and oil immersion can be adjusted for water immersion and a definite slide thickness, by putting the lamp at a certain distance, and centering a suitable achromatic lens close below the condenser. Half or the whole of an appropriate rapid rectilinear photographic objective will sometimes suit. The aperture can then be further adjusted by observation of the light circle on the back of the high-power immersion objective, with a 1.0-millimeter slide, while a 3-millimeter diaphragm is on the source of light, so that the lighted area of the object is equal to or less than the field of the eyepiece. This light circle on the back of the objective should be as large and uniform as possible, and show no marginal ring when the condenser is raised or lowered. If such a ring appears, the lamp distance is to be altered until it vanishes.

5. Testing the High-power Objective.—This may be done (after the condenser is corrected) by observing the definition and resolution of a specimen of *Surirella gemma* in hyrax, on which the incandescent lamp filament is focused, with dense green screens between; or by observing the definition with direct and oblique light of the edges of the silver bands in the Abbe test plate; or by observing out-of-focus bright particles in the dark field obtained by the regular or special condensers for objectives of all apertures, up to 1.3 (Siedentopf's method). This latter is the "star" test, as described by Coles.

6. Testing the Eyepiece.—It is usually sufficient to see that the lenses are free from smears or film. Spots on the eyepiece lenses move on rotation of the eyepiece, while those on the upper prism surfaces of the binocular do not. The diaphragm should not have shifted in the eyepiece tube, and its edge should be sharp to normal distance vision.

7. Testing the Binocular.—This should be compared with the monocular tube, one eye at a time; a test object being used, and the illumination equalized in both cases. The optical tube length may be tested by seeing if the focus is changed when shifting from monocular to binocular.

8. Testing the Photographic Attachment.—Since flatness of field and accuracy of focusing are the main points, a photograph may be taken of the silver lines of the Abbe test plate, after the correct time of exposure has been ascertained by the Goldberg wedge. The centering should be unaltered, after screwing on the attachment, from what it was before.

9. Testing the Dark-field Condenser.—Small particles of silver on the Abbe test plate have been used for this. The living spirilla and spirochætes of the teeth are commonly employed. Test diatoms give good results on a slide of the right thickness. The star test is usually too delicate for the condenser.

10. A Regular Test for the High-power Microscope.—The four or five most difficult objects on Moeller's test slide of 20 diatoms afford a good test for regular use; the illumination being constant as to color, intensity, and aperture, and the eye being unfatigued; or a slide of *Surirella gemma* in hyrax may well be employed; or a well-fixed, well-stained, gentian-violet smear of spirochætes from the mouth.

11. The Star Test for the Objective.—This method, lately fully described by Coles (47), has several advantages. It consists in focusing the condenser (with a $4/5$ or $9/10$ cone) on a slide having an opaque film of silver (or a nigrosin smear), deposited on it, under a cover-glass of standard thickness, with immersion oil (or balsam) between. If there is undercorrection for axial spherical aberration, too thin a cover-glass, too short tube length, or too high a number on the correction collar, the diffraction rings seen around a minute hole in the silver (or nigrosin) film, are most conspicuous when the focus of the microscope

is below the object, while with the focus above the object, there is a mist; and *vice versa* for overcorrection. The rule is: undercorrection shows mist *beyond* focus, seen on focusing *up;* overcorrection shows mist *within* focus, seen on focusing *down.* If the rings are not circular, there is astigmatism in the objective. If the rings are not concentric, the lenses of the objective are not properly centered. Other aberrations alter the rings, when the tube length is correct. With everything correct, they should be circular, concentric, correctly spaced, and of nearly the same brilliancy above and below the focus.

12. Testing the Revolving Nosepiece.—The nosepiece should be tested to see if all the objectives center nearly the same and center in the tube when the nosepiece is removed. They will not if the snap has loosened. The test can be made without immersing any objectives. The rotating part of the nosepiece should be screwed up tight enough to prevent any shake on pressing on an objective; but not so tight as to prevent the snap working properly.

CHAPTER XX

CARE OF THE MICROSCOPE

Care of the Lamp.—The electric lamp lasts longer if it is switched off at pauses between observations. This, if carefully attended to at first, soon becomes a matter of routine, and is then done mechanically as soon as one ceases to look through the microscope. But the 6-volt lamp should not be turned on again until cool, if of about 100 watts. These 6-volt bulbs of large size should be locked up when not in their proper socket, because they may be inadvertently screwed into a 110-volt socket, and so destroyed. The lamp may well be fixed at one spot on the table, by screwing down its stand, so that it will not be liable to jar. With care a C-Mazda lamp (110 volts) or a 6-volt, 100-watt lamp with coil or ribbon will last for months, with several hours of daily use.

Care of the Ground Glass Disc.—This should be as thin as practicable, and finely ground on both sides. The surfaces may be made fine by grinding two discs together with carborundum flour and water. If wiped dry, not washed, a fine deposit is left in the scratches, which perceptibly improves the light. The disc of ground glass may be warmed and rubbed on one or both sides with tissue or lens paper moistened with a nearly saturated solution of magnesium sulphate. This should be polished off dry, so as to leave an almost invisible residue, sufficient to exclude direct light. After a damp day, it may crystallize, and require replacing.

Care of the Light Filters.—The plane surfaces of these should be carefully cleaned and kept free from finger prints. If made of gelatin mounted in balsam, they must not be heated by being too close to the lamp, or by having the free circulation of air around them shut off. Also in

cleansing them, alcohol, xylol, or water should be kept away from the edges, which may well be coated with a shellac varnish. These mounted gelatin films should not be left about on the table, perhaps in direct sunlight, but should be put away in a box when not in use. Similarly, the turning out of the lamp, when not in use, will extend the duration of the gelatin color filters. These are preferable to the colored glasses, because of the large number available with different absorptions; because they can be accurately reproduced; and because they are obtainable, if necessary, in plane-parallel glass (though optically worked Chance colored glass is now procurable). They should be handled by the edges or corners.

Care of the Reflecting Prism, or Plane Mirror.—The surfaces of these are optically plane, and they should be treated with as much care as the surfaces of condenser lenses. Hydrofluoric acid, or pastes containing it, are sometimes regularly kept and used in the biological laboratory to dull glass surfaces for writing on. They should not be in the same room with the microscopes, for the vapors may spoil all exposed surfaces of optical glass, especially if a containing bottle (often made of paraffin wax) gets uncorked or broken. Dust in some localities contains particles of quartz which will scratch glass. Hence, it should be blown off the plane mirror or prism, before wiping this with lens paper.

Care of the Condenser.—The condenser is usually more exposed than the objective. In damp, hot climates, or in warm, wet weather, fungus filaments may grow over the glass, and will mark or dim the surface of the flint glass if not regularly wiped off. The top lens of a condenser may be held in by shellac cement, and alcohol must in consequence be kept from it. In some makes of immersion condenser (such as Watson's holoscopic), the top lens is cemented to a thinnish plane-parallel glass disc, which may be cracked by rough usage. Condensers with large lenses should not have the electric bulb too close, or they may heat up or crack. A paper scale may well be fixed close

to the iris handle of the condenser, with the apertures marked on it. The appropriate stops for dark ground should be fitted as close as possible to the lower focal plane of the condenser. Cardboard flanges to hold them may be easily cemented under the iris. These stops should be kept handy in a small box. The top lens of a water-immersed condenser must be kept free from traces of immersion oil, or the water will not cling. Xylol may be used instead of water with slides below the standard thickness.

Care of the Slides.—The slides should be nearly uniform in thickness, and in color of glass. They can be cleaned by acetic, chromic, or nitric acids. If well cleaned and not touched with the fingers (which always exude some slight grease), they can be used at once with a water-immersion condenser. But otherwise, the under side of each must be wiped before use with towelling paper or filter paper moistened with xylol or alcohol, so that the water may spread uniformly. Temporary preparations are often to be preferred to permanent ones; and in that case the slides may be used many times over. Here, especially, there is a marked advantage in getting the slides uniform in thickness, with a range of only 0.1 millimeter; for 1 millimeter is a convenient thickness, and such slides are not often broken by the experienced worker, so that there is no need for seeking thicker ones. If the corners are sharp, they may be touched by a file wetted with xylol.

Care of the Mounting Media.—Canada balsam in xylol is conveniently kept in leaden collapsible tubes, when used for mounting stained paraffin sections. Otherwise, it is difficult to prevent it from fastening down the cork stopper or cap. A glass cap, however, is easier to keep clean than a stopper. Dammar is best made for sealing by picking out the colorless lumps of the resin and adding them in excess to a little xylol in a wide-mouthed capped bottle. For closing iron-acetocarmine preparations, these are allowed to dry at the edges, and immediately sealed with thick dammar applied with a brush (or with melted paraffin). Where oil-immersion objectives are to

be much used, the dammar or paraffin at the edges may be covered with shellac or with clear cellulose lacquer. Temporary preparations, instead of being in liquid, can sometimes be mounted in agar jelly with an antiseptic. This is easier to seal than a liquid. Mounts in immersion oil, after hardening at the edges, can be sealed with cellulose lacquer.

Care of the Preparations.—Iron-acetocarmine preparations seem to spoil soon in direct sunshine, and apparently even diffused light is prejudicial. They are said to keep well over ice. At any rate, all stained preparations should be kept in the dark when not being examined, unless purposely exposed for partial fading. The trays with the slides flat are superior to racks; because the slides can be looked over, and there is no sinking of loose objects to one side. Covers often require to be cleaned and polished before the specimen is looked at, and this matter should be attended to each time. The upper surface of the cover-glass is part of the optical system of the microscope. The writer finds it best to clean off immersion oil while the slide is on the stage, immediately after removing the oil-immersion objective. Then either a dry or a water-immersion objective can be used forthwith, if needed.

It should not be forgotten that the object of microscopical work is to accumulate knowledge, and not, primarily, a collection of well-stained preparations. So, temporary preparations should be used as freely as possible, and even well-stained sections need only be preserved, after they have been studied, when they are wanted for future reference or to show others.

Care of the Covers.—The familiar covers, long made by Chance Brothers, of hard slightly greenish crown glass, are sometimes covered with a crystalline film. This can be cleared off immediately by applying a drop of 50 per cent acetic acid to each side of the cover. After wiping, they are usable forthwith for ordinary work. Nitric or chromic acid is used to dissolve organic matter from cover-glasses. After practice, cover-glasses can be

wiped by a fold of towelling paper or filter paper, without excessive breakage. It has been recommended to wipe covers between two flat blocks of wood covered with chamois leather (Dallinger), but a fresh wiping surface each time is preferable. Well-cleaned covers can be washed in distilled water, and left to dry under shelter from dust. Cleaned covers can also be kept in pure alcohol, and dried by burning off the alcohol. In warm, damp climates, soft glass covers readily tarnish, and all covers are kept best in xylol. To clean a mounted cover from a drop of cedar oil, the minimum amount of oil should have been used with the objective. This is wiped off with tissue paper towelling or filter paper, followed by paper moistened with alcohol, wet paper, and then dry paper. When using a water-immersion objective, a touch or two with a small roll of filter paper will dry the cover ready for the use of the dry finder objective.

Care of the Immersion Oil.—This should be kept from oxidation (and consequent excessive thickening and rise of refractive index) by storing it in small bottles well corked and in the dark. The immersion oil by the maker of the objective should be used in each case. The refractive index is 1.515 for the *D* line, for thickened cedar oil from *Juniperus virginiana.* On its refractive index and its dispersion, the calculations for the objectives have been made. Some mixtures may show about the same refractive index and dispersion as thickened cedar oil. Anisol is the best single proposed substitute, but it has so different a dispersion as to reduce apochromatic objectives to the level of achromatics (Becher).

Care of the Slide Bar.—The stage and underside of the slide bar must be kept free from balsam or immersion oil. This is especially important in the Detto slide bar, which is made for circular stages. The stage may be wetted with distilled water, and the slide moved over a layer of water held by capillary attraction. In the Detto slide bar, the moving part is in contact with the stage only at a cork knob, which must be replaced occasionally as it wears out.

Care of the Object Traverser (Detachable Mechanical Stage).—This useful piece of apparatus only requires ordinary care to keep balsam, immersion oil, acetic acid, etc., out of the rackwork, and free from the stage. The up-and-down motion must be kept tighter than the transverse movement.

Care of the Objectives.—These are the most important *parts of the microscope. They must not be let fall, or the* balsam in their compound lenses may be sprung. Hence they are best kept screwed on the nosepiece. The writer has seen cases where the balsam in the lenses was melted and caused to bubble by excessive heat, perhaps from too close proximity to the lamp. It is said that the front lens of an immersion objective is readily broken (Spitta). It is usually fastened in place by a thin flange of metal turned over the edge of the glass, which oil will not pass. This is not the case, however, with some oil-immersion objectives of 1.4 aperture, where the front lens is held only by a thin line of cement which will not stand alcohol. The front lens of a dry objective must be kept optically clean. One touch with the clean finger will cause a fingerprint, which will dull the image. Even touching the sheet of lens paper with the clean fingers will prevent perfect polishing. The writer polishes first with lens paper moistened with distilled water, and then with a small roll of dry lens paper, using the end of the roll only, and tearing off a fresh *surface each time. The back of an objective should be* kept free from dust, by blowing off any that settles there. It can be cleaned, if necessary, by a roll of lens paper wrapped round filter paper, after breathing on it, or moistening it with distilled water. A water-immersion objective, in the writer's experience, requires the front lens to be cleaned from grease, by the occasional application of lens paper moistened with xylol. Only distilled water should be used in cleaning lenses.

The oil should not be allowed to dry on an oil-immersion objective; but should be cleaned off first with lens paper, or filter paper, then with lens paper moistened with xylol,

and lastly with filter paper moistened with distilled water, or dry lens paper. The lens paper, or filter paper, is used in little rolls, and the wiping is done with the fresh end of a roll, as already noted. Objectives, when not in use, may be stored in a dessicator over fused calcium chloride, and may improve there instead of deteriorating. They may be taken out after dessicating for some weeks, and screwed tightly into their boxes, for storage. The brass work of old objectives can be cleaned externally with a typewriter eraser (and patience). They can then be coated with clear cellulose lacquer.

Care of the Revolving Nosepiece.—According to Messrs. Watson (130), the nosepiece wears better if always rotated in the same direction. In the writer's experience, this is clockwise, as seen from below, with the revolving nosepieces of Zeiss. The central screw sometimes needs a slight tightening, for there should not be a perceptible shake. The revolving nosepiece is one of the most important mechanical parts of the microscope, and the best possible one should be obtained. The screws of the spring catch should not be loosened unnecessarily, as in some forms the centering is done by shifting the position of the catch a few hundredths of a millimeter. In some nosepieces the final centering is done by taking advantage of a slight lateral play when screwing the nosepiece to the microscope tube.

Care of the Drawtube.—There should be a diaphragm in it, as Nelson pointed out. It should be ascertained by measurement whether the graduations on the drawtube include the nosepiece or not; and, if not, the proper allowance should be made in setting the tube length at the correct measure, usually 160 millimeters. The drawtube should be polished occasionally, so that it does not slide stiffly. A good drawtube should extend further below the 160 (or 170) mark than it usually does.

Care of the Rackwork and Micrometer Screw.—The former requires to be kept free from dust. Hence, the instrument should be under cover when not in use, which

also keeps dust from eyepieces and objectives. The rack-work should be tightened enough to hold up, without any slip, the nosepiece with perhaps four objectives, and a binocular attachment, or a Phoku or similar attachable camera. The fine motion by micrometer screw should be strong enough to be uninjured by the above weights, and should not be exposed to pressure or shock. The best and most-used methods for fine motion are: a lever plus a screw; a differential screw with coarse threads; a combination of a worm, or similar inclined plane, and a screw; and toothed wheels plus a lever.

Care of the Eyepiece.—The eyepiece should be kept free from dust, and, hence, if the whole microscope is not covered by a bell jar, cloth cap, cardboard cover, etc., at least a cap should be kept over each eyepiece when not being looked through. Such caps could be made of aluminum, *papier maché*, cardboard, or even cloth. The eyepieces should not be dropped, especially those with cemented lenses. Hence there is perhaps an advantage in having them "sprung" into the drawtube. The sides of the "sprung-in" eyepieces can be cleaned with alcohol occasionally with advantage, or slightly smeared with vaselin. If the upper surface of the eyelens is at all smeared, there will be a corresponding loss of definition, and an optical smear is often only visible with a hand lens.

Dust in the Microscope.—On focusing down, with the low power and a dusty microscope, there are seen besides the dust on the eyepiece (and prism, in a binocular), first the dust on the two surfaces of the accessory lens below the condenser, then that on the surfaces of the reflecting prism (or mirror), and finally the dust on the surfaces of the color screen. On continued focusing down, the two surfaces of the cover-glass are passed, and the dust on the upper and lower surfaces of the slide is seen. Lastly, dust on the upper surface of the top condenser lens may come into focus.

On looking at the back of the objective, smears of oil on the low-power objective are visible; bubbles in the immer-

sion oil of the high objectives are seen; and partial loss of the water immersing the condenser is also visible.

Care of the Binocular or Binocular Attachment.—This must be used only with the tube length correct to a millimeter. Since the tube length is (or should be) invariable, water-immersion objectives with correction collars are especially suitable for use with a binocular. If the eyepieces are not often changed, less dust will get on the prisms. The binocular attachment may be kept on the microscope under a tall bell jar, a wooden ring being used if necessary to supplement the height. The drawing camera may be fixed to the right-hand tube, and the left eyepiece covered with a disc of waxed paper or of ground glass. When using the binocular attachment, it is of advantage to have a microscope which will not incline more than 45 degrees from the vertical. (The writer has but once used his microscope horizontal in over 30 years.) It is also conducive to steadiness to have the microscope screwed, or otherwise fastened down, to a board, or to the table.

Care of the Photographic Attachment.—Siedentopf's "Phoku" apparatus is referred to here, as being, so far as the writer knows, the first accurate camera of this kind. Care must be taken that the tube length is correct to a millimeter. The two homal projection lenses should be treated with as much care as objectives. All ordinary exposures can be made with the lever arm, the wire release being only for short exposures, and being somewhat liable to get out of order. With correct illumination, the circular diaphragm below the plate is unnecessary. The upper surface of the main prism must occasionally be freed from dust and particles. When used with the microscope inclined, as is best, care must be taken that its weight does not make the body of the instrument sag backward and finally topple over.

Care of the Binocular Magnifier.—This is sometimes made with four separate Porro prisms, as in field glasses, but usually with two compact sets. Probably these

prisms are best cleaned by the maker, unless the microscopist is expert in this operation. However, the objectives (or their exposed surfaces) and the eyepieces can be kept optically clean. The magnifier may be kept under a bell jar when not in use; and an included vessel of fused calcium chloride will keep lenses and prisms dry, and free from film. This is especially needed in a laboratory where autoclaves are steaming.

Care of the Greenough.—The prisms are cemented in one block (No. 2 Porro prisms of Czapski-Eppenstein, 57), and can in some makes be taken out and cleaned without much trouble. In putting them back, an object must be observed to see if both images exactly coincide. If not, the prisms must be shifted till they do. The objectives are often hard to clean on the back, but a roll of filter paper with lens paper round one end, or a long roll of lens paper, can be used when the ends of the objectives do not unscrew. The adjusting screws of these objectives should only be altered by the makers. The Greenough should be covered when not in use.

Care of the Hand Lens.—If this is a cemented doublet or triplet, it should not be dropped. If the cement gets sprung, however, the lens can usually be mended by removing it from the metal socket, cleaning, and recementing. If it is held in by turned metal flanges, it should be carefully cleaned with xylol, and have either one side covered with balsam, or be altogether immersed in balsam in a vessel, and put in a warm oven, at about 100° C., or more, for some hours or days, until the balsam has returned between the lenses.

Practical Points

1. Switch off the lamp when not looking through the microscope.

2. Treat the ground glass at regular intervals with magnesium sulphate (or use freshly ground glass, wiped dry from grinding, not washed).

3. Do not expose the gelatin light filters to unnecessary light or to direct sunlight.

4. Avoid vapor of hydrofluoric acid in the laboratory.

5. Do not let direct sunlight fall on the mirror and pass through the microscope.

6. With a water-immersion condenser, keep the top lens and the under surface of the slide free from immersion oil.

7. Iron-acetocarmine preparations may be sealed with thick dammar solution in xylol, applied with a brush, or with melted paraffin.

8. Iron-acetocarmine and most other preparations should be kept in the dark, and shielded from the direct sunlight.

9. The upper surface of the cover-glass is part of the optical system of the microscope, and should be kept as clean as the lower lens of the objective.

10. The oxygen of the air should be kept from the cedar immersion oil, or it rapidly thickens (and its index of refraction rises).

11. The front lens of a dry objective should be kept optically clean.

12. The front lens of a water-immersion objective should be free from traces of grease.

13. Caps to put over the eyepieces during temporary disuse are of importance in keeping off dust.

14. With the binocular attachment, or the Phoku camera, special precautions must be taken to prevent the microscope toppling backwards.

15. The prisms of the Greenough require cleaning at definite intervals.

16. An achromatic hand lens, with the balsam "sprung," can readily be cemented again.

CHAPTER XXI

RULES FOR HIGH-POWER AND ROUTINE MICROSCOPY

HIGH-POWER MICROSCOPY

1. Have a large enough incandescent surface for the source of light.

2. Or use double-ground glass (which does not pass direct light) as a radiant.

3. Have a 3-millimeter diaphragm close to the source of light, for high powers. Put the object in the spot of light, and focus down.

4. For ultimate resolution, with high powers, use a light source whose image on the object is much less than the object field.

5. Employ yellow-green light filters for the best vision, especially with achromatic or fluorite objectives. Blue-green screens may be used with apochromatics.

6. Use blue-violet light filters for the largest aperture in photography, with apochromatic objectives.

7. Control the intensity of the light by a set of screens, preferably yellow-green.

8. Use a (silvered) reflecting prism instead of a mirror, so as to have only one image of the source.

9. Adjust the distance of the source of light to suit the corrections of the condenser. If the condenser is made for parallel rays, an accessory achromatic lens must be fitted below it.

10. Use water immersion for the condenser in daily use.

11. Employ only an aplanatic well-centered condenser, corrected for color by being achromatic, or by a deep-green screen.

12. Provide dark-ground stops of the right sizes for the corrected immersion condenser, suited to the low and medium objectives. They give an excellent dark field.

13. Use a Nelson Cassegrain or similar condenser for dark field with objects in immersion oil or balsam, with high-power oil-immersion objectives; and a cardioid or bicentric condenser for objects in water, with oil-immersion objectives of lower aperture; both with a centering ring in the substage sleeve.

14. Have the slides 1.0 millimeter thick, within 0.1 millimeter. This is important.

15. Have the covers 0.17 millimeter thick (or 0.01 less), whenever fine details are to be observed. This is also important.

16. Use a water-immersion objective (with a correction collar) for objects in water, except for those close to (within 10 microns of) the cover-glass.

17. Have the objectives well centered on the nosepiece (and the condenser permanently centered with the high oil-immersion objective).

18. Omit the high dry objective, unless it has a correction collar.

19. Have no objective on the standard microscope lower than 8 or 10 times.

20. A fluorite oil-immersion objective, used with yellow-green glass may be nearly equal to an apochromatic objective, for observation.

21. Only apochromatic objectives are to be employed for photography with blue light.

22. Keep the objectives, especially, optically clean.

23. See that the nosepiece has no backlash, and is rotated the right way. It should be carefully centered by the maker.

24. Keep the mechanical tube length normally at the standard length.

25. Even with oil-immersion objectives, increase the tube length slightly when the cover-glass is thinner than normal. For a 90 oil-immersion objective, this increase may be about 1 millimeter for each 0.01 millimeter below normal.

26. With a binocular, use only covers of the correct thickness, if the tube length cannot be altered by pulling out the eyepieces slightly.

27. Objectives with correction collars are advantageous on a binocular when the tube length cannot be altered much.

28. Have a diaphragm in the drawtube of the monocular, about 14 millimeters wide, below the longest eyepiece.

29. Choose a lower objective usually, rather than a low eyepiece (which often shows curvature of the field).

30. Use as a rule no higher eyepiece than the maximum useful magnification of 1,000 times the working aperture will allow (except for drawing).

31. Employ dark-ground illumination for fine details which are due to differences of refraction.

32. Red-stained bacteria and spirochætes show well when examined dry on a dark ground (Coles).

33. Some objects are better observed in water than in balsam, when either can be used.

34. Use low Huyghenian or high orthoscopic eyepieces with low achromatic objectives; and compensating eyepieces with high-power achromatic, or fluorite objectives.

35. Use compensating eyepieces with apochromatic objectives.

36. Employ projection eyepieces or homals for photography.

37. Get the interocular distance exact in a binocular, and note its measurement. In the Jentzsch form of binocular the tube length may be corrected for different interocular distances.

38. Compensate the unoccupied eye, in a monocular, with a disc of ground glass.

39. Keep the upper surface of the eyelens optically clean.

40. Use a condenser cone up to nine-tenths of the aperture of the objective, with well-stained objects, if possible.

41. Mount the objects in as close contact with the cover-glass as possible.

42. Have the mounting media as close in refraction to 1.33 or 1.52, respectively, as possible (in most cases).

44. Measure the cover-glasses on the preparations with the fine motion of the microscope, or with a screw gage before mounting.

45. Keep the microscope under a bell jar with a vessel of fused calcium chloride, in damp weather.

46. Keep the objectives, when not in use, in a dessicator over fused calcium chloride, in tropical climates especially.

47. Have a sliding bar or a screw object traverser on the microscope stage.

48. Use a corrected pocket magnifier of 3 to 10 times for examining the objective lenses for cleanliness.

49. Use a Steinheil magnifier of 10 to 16 times to magnify the eyepiece circles.

50. Test the optical performance of the microscope with the high objectives regularly, and keep it up to the standard.

ROUTINE MICROSCOPY

1. Use a C-Mazda lamp, frosted internally, as a radiant; with a clear, yellow-green or blue, light filter, and an iris diaphragm.

2. Have a dry achromatic condenser, corrected for lamp distance and for slides 1 millimeter thick. Focus the radiant on the slide.

3. Use only slides 1 millimeter thick, for important work.

4. Use only covers 0.17 millimeter thick, for important work.

5. If *no* covers are used, pull out the tube (or eyepiece) about 15 millimeters, with the 90 oil-immersion objective, for optimum observation.

6. Use (neutral or) yellow-green screens to moderate the light.

7. The oil-immersion objective of about 1.0 aperture can often replace that of 1.3 aperture, with advantage.

8. With high powers, contract the iris on the source of light, to cut off glare.

ERRORS REGARDING OPTICAL LAWS, ETC.

1. To use an uncorrected magnifying lens instead of a corrected one. A calculation (57) shows that only a corrected lens can approximate the optimum of definition and illumination.

2. To hold a corrected magnifier several inches from the eye. A calculation (57) shows that this results in diminution of field.

3. To put paired objectives on different instruments in the Greenough binocular. As the makers (Zeiss, Spencer) state, the objectives are centered to their own instruments.

4. To use the Greenough binocular through the uneven cover of a Petri dish. A disc of plate glass permits perfect images.

5. To use constantly enlargements above the maximum useful magnification. They show nothing new to normally acute vision.

6. To use blue sky for high-power work. It is not intense enough, and no condensers can increase the original intensity of the source of light.

7. Neither closing the iris of the condenser, nor moving it far down should be done to alter the intensity of the light. These methods decrease the aperture, and thus injure resolution and definition.

8. To use too large a source of light, especially with high powers. There is glare when the light falls beyond that part of the object which is seen.

9. To omit using a yellow-green screen occasionally or frequently. This cheap addition perceptibly adds to the efficiency of objectives, especially of achromatic objectives.

10. Not to use a (silvered) prism instead of a plane mirror, for the best work. A plane mirror gives three or more images, which are hard to focus exactly when using a small diaphragm on the source, and may cause some glare.

11. To use an uncorrected condenser. Experiment shows that this results in loss of aperture or in glare, usually in both.

12. To consider the objective of 1.4 aperture always $^{1}/_{13}$ better than the corresponding objective of 1.3 aperture. The latter has sometimes better definition, especially if the centering is not perfect.

13. To use slides of differing thicknesses. These spoil the corrections of the condenser, and thus lessen aperture. Plate glass of fixed thickness (0.9 to 1.1 millimeters) is readily obtainable.

14. To use an immersion condenser dry. Its corrections are thus spoiled. If water immersion is used, the process of immersion is clean and easy.

15. To use ordinary thick paraffin oil as immersion oil. A trial showed that an apochromatic objective costing $108 was thus reduced a perceptible degree below the level of an achromatic objective which cost $25.

16. To use a dry objective as a water immersion. The laws of optics ensure bad images.

17. To leave the condenser iris wide open for the low-power objective. It will usually pay (by glare being absent) to take out the eyepiece and look at the back of the objective while closing the iris till the objective circle is not quite full of light.

18. To fail to lift a high-power objective before swinging it from the slide. This sometimes results in injury to the cover or the objective, especially with the objectives of shortest focus, used on thickish covers.

19. Bad centering of the objectives on the nosepiece should not be allowed. It not only injures the images of the object, but it makes focusing down of the high powers on the small diaphragm image unreliable.

20. A good nosepiece should apparently always be turned one way (clockwise, as seen from below, with Zeiss nosepieces).

21. With covers varying from 0.17 millimeter, even the oil-immersion objective will not give the optimum image unless the tube length is correspondingly altered.

22. When ordinary oil-immersion objectives are used without a cover, the best image will not be got without a corresponding increase of tube length.

23. It is usually a mistake not to have all objectives and eyepieces by the same maker.

24. It is wrong (Nelson) not to use a 14-millimeter diaphragm in the drawtube of the monocular microscope.

25. With a 60 apochromatic objective (of 1.3 or 1.4 aperture) the tube length must be adjusted to 160 millimeters within less than a millimeter (with correct cover thickness).

26. An objective with correction collar should not be regularly used by setting the collar at one point (say 15). It will pay to learn to measure the covers.

27. In using objectives corrected for 170 millimeters (Leitz), on a microscope with fixed tube length of 160 millimeters, collars 10 millimeters deep may be fitted to the eyepieces, to get optimum images.

28. An achromatic condenser, made for a distant source, loses much aperture if used with a near lamp, without an appropriate achromatic correcting lens being fitted below.

29. Do not take photographs with a microscope objective alone, if optimum results are required.

30. Do not take photographs with Huyghenian, or compensating, or other eyepieces used for observation, if optimum results are required. The special projection eyepieces or the homal eyepieces accord with optical laws. (If an eyepiece is nevertheless used, it is better to focus by pulling out the tube, than by raising the objective.)

MICROSCOPICAL MISHAPS

1. If the low-voltage lamp burns out too quickly, and the transformer and main voltage are right, it is probably due to the lamp being turned on again too soon to have cooled off.

2. If the light is somewhat too dim with the high power, see if the ground glass is centered with respect to the incandescent ribbon, and is close enough. In a pyrex lamp it can be quite close.

3. If the condenser light cone refuses to fill the back of the high-power oil objective, adjustments being apparently correct, the water immersing the condenser has probably dried up or slid off.

4. If the water used for immersing the condenser is continually running off, or retains bubbles, clean upper lens of condenser and lower surface of slide with xylol.

5. If there is something wrong with the definition in an oil-immersion (or water-immersion) objective, look down the tube at the back of the objective (or look at the eyepoint through a magnifier), and see if there is a bubble visible in the immersion fluid.

6. If the definition is injured in a way which experience shows results from the light being one sided, look at the back of the objective, and it may be found that the reflecting prism (or mirror) is out of center with the lamp and condenser.

7. If the image found after focusing down with the oil-immersion objective (especially the 60) is unexpectedly dull, it may be that there is not enough oil to make contact.

8. If on pressing out a cell in acetocarmine or immersion oil by pressure on the cover with a knife blade, the slide breaks, it is usually because the condenser has not been racked up into contact so as to support the slide.

9. If the oil-immersion objective is focused too far down on the cover-glass, so as to break the object, this may be because the small diaphragm has not been put on the source, and its image focused in the plane of the object.

10. If the high dry and oil-immersion objectives catch on screw heads of the stage, and so are damaged, it may be because they are not raised before revolving.

11. If the object shows poor definition, it may be because the objective has slid slightly past the catch on the nosepiece; or the objective may be screwed loosely in its socket.

12. If the front lens of the objective of 1.4 aperture is pushed in, it may come from not putting the 3-millimeter diaphragm on the radiant, from not raising the objective slightly after oil contact is seen to be made, from too little

oil, from too thick a cover, from paraffin wax on the cover, or from cleaning with alcohol.

13. If the high oil-immersion objective presses on the cover-glass before the object, or the image of the 3-millimeter diaphragm, is seen, the cover is too thick, probably over 0.20 millimeter.

14. If the defining power of an oil-immersion objective is imperfect, it may arise from dry immersion oil on the front lens.

15. If the water runs off between the water-immersion condenser and the slide, clean the front lens, and also the under surface of the slide, with xylol.

16. If the rotating nosepiece gives trouble, it may come from not turning it in the right direction, usually clockwise, seen from below.

17. In using acetocarmine, dry objectives may be clouded by a film of carmine on the front lens.

18. If the condenser does not give enough light, it may be that immersion oil or water has got between the lenses.

19. A common cause of poor images with low and medium dry objectives, is immersion oil on the front lens.

20. If the properly corrected condenser fails to give a full cone, it is probable that the slide is too thick or too thin. A partial correction of this may be made by moving the lamp nearer or farther, respectively.

MANIPULATION OF HIGH POWERS

When starting work, see that the lamp distance is correct with the microscope slanted to the correct degree. Make the interocular distance on the binocular correct. Insert the slide, and water immerse the condenser. Get the light centered by pulling out an eyepiece and looking down the tube. Focus down the low-power objective on the edge of this light circle which you shift so as to make the edge cross the field. Put the object in the spot of light. Reduce condenser aperture to suit low-power objective while looking at eyepoint with 10 magnifier. Apply

green screen. Search the slide, and find object for high power. Put a 3-millimeter diaphragm on the source. Center it, focus it, and increase the condenser aperture. Put immersion oil on the lighted spot on the slide, as well as on the front lens of the oil-immersion objective. Focus down the immersion objective, looking outside till the oil runs in by capillary attraction. Raise the objective slightly to make sure it is not below the focus. Lower objective until object or diaphragm edge is visible. Center object. Focus and center diaphragm. Look at eyepiece circle with 10-times magnifier, and open condenser iris sufficiently. Apply suitable yellow-green or blue-green screen. Slightly change iris and condenser focus for optimum vision. After observing, raise objective, and then revolve it. (Clean off immersion oil before leaving microscope.)

CHAPTER XXII

THE PAST AND FUTURE OF THE MICROSCOPE

Earliest Inventions.—Convex glass lenses, used as spectacles for presbyopy, were made, according to the available records, about 640 years ago. During the next 320 years after this, the art of grinding and polishing low-power convex lenses was more or less practiced, and at some period concave lenses were also made. At any rate, one of the first compound microscopes was that combination of a convex objective lens with a concave eyelens, which is now called a Bruecke magnifier, and which has been lately abandoned because of its small field. This was invented or re-invented by Galileo before 1620. About this time came the use of a compound microscope of two convex lenses, the discovery of which is doubtfully assigned to various persons, and which was also used by Galileo. Of course these lenses, being uncorrected, required to be narrowly diaphragmed. Galileo appears to have used an amplification of 36 times. It is difficult to distinguish the original inventor, in those unscientific ages, from the re-inventor, or from the person who made an instrument from a report in a letter, or an indication carried by word of mouth. Possibly some of the names that have come down to us as original inventors at these distant periods are the wrong ones.

The Simple Magnifier.—Whoever may have invented the compound microscope, however, it was destined to be surpassed for about 200 years, in the work of microscopical discovery, by the simple lens of short focus with a narrow diaphragm. Practice in the grinding and mounting of such small lenses enabled Leeuwenhoek, from 1673 onward, to chronicle such a list of microscopical discoveries as hardly any other observer could claim.

Down to the end of the first quarter of the nineteenth century, the simple lens seems to have been the instrument of the investigator. Even as late as 1835, at Robert Brown, the botanist's, advice, Darwin took only a simple microscope on his voyage of research in natural history; and his long work on Cirripedes seems to have been conducted with the simple microscope and uncorrected single or double lenses. Wollaston's "doublet" came just too late, when the achromatic objective was soon to be common; though, for long, such uncemented "doublets" and "triplets" were made by Zeiss. (Since such combinations are now nearly obsolete, the terms "doublet" and "triplet" are applied, following good examples, in this book, to cemented compound lenses only.)

The Achromatic Objective.—About 1823, an important event occurred, for Chevalier constructed compound objectives of two or more cemented doublets, each consisting of a planoconcave flint and a biconvex crown lens; he also learned by experience that, to give least spherical aberration, the plane sides must be next the object. The best distances were doubtless determined by trial, not by calculation. Several persons are recorded as having previously tried, for the microscope, achromatic combinations, after the pattern of the achromatic telescope objective, invented long before. Chevalier, apparently, still retained the narrow diaphragm of the uncorrected objective, which was removed by Lister, who understood the importance of increase of aperture. Lister, in 1826, caused to be made an achromatic microscope with a compound objective; and in 1830 he published his celebrated paper on the aplanatic foci of achromatic doublets, which led to the rational manufacture of objectives made of a number of doublets or triplets. The practical construction of achromatic objectives did not go farther along the line of correcting each doublet separately; but followed instead the way of making non-separable objectives, in which one compound lens, or more, at the back, corrected errors of the other simple or compound

lenses in front. One early form had a triplet in front, and a doublet in the middle, while the back lens was again a triplet. The use of eight components, of course, added to the cost. Much of the adjustment in such an objective was done by trial of different distances, and tentative combinations were made of components slightly differing in their curves, until the test objects were best seen. Thus, there was no uniformity in the objectives up to the time of Abbe's method of previous complete calculation, and exact workmanship, with accurate tests of the curves. However, Ross, in 1837, invented the correction for different thicknesses of cover-glass by moving the front lens farther from (for thinner covers), or nearer to (for thicker covers), the other lenses. Wenham, in 1855, improved this somewhat by moving only the back lenses, the front lens or lenses being stationary. Wenham, in 1850, also invented the single small uncorrected front lens to the objective, serving mainly as the magnifier, the corrections being taken by the two back doublets; and this invention facilitated the manufacture of objectives.

The Water-immersion Objective.—The making of water-immersion objectives, on this model, was carried out in the 'sixties and 'seventies, especially by Hartnack, reaching its zenith about 1877. Some of these water immersions had an aperture of 1.23, and many discoveries were made by them. A look at Carpenter's classic book on the microscope, in its 1875 edition, will show the state of microscopical invention at and before that date. In England, achromatic condensers were often employed; but, on the Continent, the use of the concave mirror, with its small cone of light of about 0.3, and its considerable aberration, due to obliquity, was universal.

Abbe's Inventions.—Abbe, in 1873, had given an account of his wide-angled condenser, used preferably as a water immersion. It was not corrected, since only a cone of about 0.3 was required; and this could be delivered at various angles, thus replacing the concave mirror. In 1877, Abbe published his theory of microscopical vision,

on which further practical advances were based. At that time, under Abbe's direction, Zeiss was making objectives from previous computations, with only one slight subsequent trial adjustment in the case of the high powers. There were rigid tests of the refractive indices of the glasses, and of the attainment of the exact curvatures of the component simple lenses. This process is now followed by all makers of objectives, and thus the chance of getting a particularly poor objective is eliminated. It is said that the calculations and ray tracings necessitated on merely changing the particular meltings of glass from which the lenses of an objective were made for new meltings of about the same compositions may require a fortnight's work. Hence a maker will keep in stock sufficient of each melting to last for a long time. Hence also, after some years, when one of the lenses of an objective requires to be replaced, it is not possible to do this satisfactorily, since all the glass of that melting is probably exhausted, and a recalculation has been made.

The Oil-immersion Objective.—In 1878, Abbe embodied a new method of correction of his own in the oil-immersion objective of high aperture. It is true that a few others had tried oil or balsam as an immersion fluid, but none of these objectives were practically employed. In the same year, Koch made use, in his work on bacteria, both of Abbe's new oil-immersion objectives and of his wide-angled immersion condenser. His example influenced all subsequent bacteriological work. The oil-immersion objective rapidly displaced the water-immersion objective in medical schools and universities; and the uncorrected high-angled condenser, used dry, slowly displaced the concave mirror, on the Continent; and, by imitation, in England and the United States.

The Apochromatic Objectives.—In 1886, Abbe finally brought our his masterpiece—the apochromatic objectives. In these, he used the new glasses which he had been instrumental in getting made at a glass works established in Jena for research; research which, as everyone knows, was in

time abundantly rewarded. These objectives also contain fluorite, which has special properties of refraction and dispersion that the experimental glass works had in vain tried to imitate in useful glasses. (Fluorite had been previously used by Abbe in his high-power achromatic objectives.) The apochromatic objectives are more costly, not only because they contain fluorite lenses, and this crystal is rather rare in a state fit for lenses; but also because they have more components, usually containing one or more triplets. (Some excellent modern apochromatic objectives are stated to contain alum or sodium nitrate lenses.) Modern achromatic objectives have been so improved by the introduction of new glasses, that Spitta classed them all as semi-apochromatic—a term usually restricted to fluorite combinations. It must be remembered that there are corrections in the apochromatic objectives for zonal spherical aberration of different colors, which cannot be had in the semi-apochromatic or fluorite objectives. (But, by the use of a yellow-green screen, achromatic and fluorite objectives can be much improved.)

At the same time Abbe put some of the needed corrections into the eyepiece, forming the well-known compensating oculars for apochromatic objectives. These corrections were also useful for the high-power achromatic objectives, but not for those below 0.8 aperture.

A list of Abbe's inventions and discoveries with regard to the microscope would be large. He discountenanced the patenting of microscopical inventions (though he freely patented his field glasses, etc.) because they were mostly used by scientific men. His example was followed by others.

In all, there appear to have been two great inventors in the history of the achromatic microscope, Abbe and Lister; and of these Abbe is undoubtedly the chief. Abbe naturally made a few slight errors of prevision; and piety to his memory does not demand that one should also countenance these errors, which, in fact, only the change of conditions has caused to be errors.

Condensers.—Among Abbe's microscopical inventions are the Abbe camera lucida, the apertometer, and the silver-grating test plate. He also had made, in 1888, for the apochromatic objectives, an achromatic condenser with large lenses, giving a desirably large image; whereas some condensers were (and are) mostly made with small lenses, giving too small an image. (The writer had this condenser in 1895, and has used it since for dry objectives.) But the example of Koch, who used the uncorrected condenser, made the bacteriologists, who probably bought most of the oil-immersion objectives sold, retain the old uncorrected condenser of 1873, used dry, not immersed; though Abbe had designed a better three-lens type for immersion. This latter is apparently the type which gives an aplanatic cone of 0.5 when immersed, according to Dallinger; whereas the writer found that one form of the two-lens type, used dry, gave a fair cone of only about 0.3, with a 3-millimeter source of light. Bacteriologists thus may be using a method of illumination 50 years out of date, and unsuited to the improved modern objectives, however well suited it may have been to the objectives of 1873, which would not bear a nearly full cone. Consequently, workers have to employ a lower eyepiece magnification than the optimum.

In 1899, Zeiss introduced a centering oil-immersion achromatic condenser (six-lens) with fine adjustment and large lenses, giving an aperture of 1.3. An excellent aplanatic-achromatic (six-lens) oil-immersion condenser with large lenses was also calculated by Metz, and made by Leitz, especially for use in a dark field. The writer has used the latter continually for several years with satisfaction, both for bright and dark field. The Spencer Lens Company, and Watson and Sons, also make immersion achromatic condensers.

The Greenough Binocular.—In 1897, the firm of Zeiss first manufactured the Greenough, or twin-objective, binocular, with erecting prisms. This is a good stereoscopic binocular, with maximum aperture of 0.1 (or some-

what more) in the objectives. It has become popular, and is now widely employed.

The Monochromatic Objective.—Von Rohr began a series of monochromatic objectives by calculating an objective of fused quartz, with an aperture (for a certain ultra-violet wave length) equivalent to 2.5, which was used as a glycerin immersion. It seems probable that the possible uses of this objective have not yet been fully worked out. It is true that it can only be used for photography, and that the ultra-violet light quickly disorganizes living or organic material. (The new monobromide of naphthalin objective, used with blue-violet light, also gives a high aperture, perhaps up to 2.0, for photography.)

The Monobjective Binocular.—About 1914, Jentsch applied the method of Abbe's binocular eyepiece, as modified by Ives, with a semitransparent layer of silver instead of a partially reflecting layer of air (Swan cube), to the construction of a binocular microscope. The success of the Greenough had prepared microscopists for a standard binocular for higher powers. This monobjective binocular has also met with success; and it is now made, with variations, by all optical firms. It suffers slightly in some forms, for high-power work, from the fact that changing the interocular distance also changes the optical tube length. However, this could readily be made right. It is used mainly to give a slightly stereoscopic image, not a strongly stereoscopic one.

Dark-field Condensers.—Jentsch also produced one of the first of the condensers for dark-field illumination, which were used mostly for ascertaining the presence of spirochætes, but are also found useful for viewing bacteria and blood parasites. These dark-field condensers give a narrow range of aperture, and usually have two total reflections, first from a convex and then from a concave internal surface (though this is reversed in Nelson's high-aperture form). They have been made with higher and higher apertures, up to 1.27 (Beck); and, in Nelson's Cassegrain and Zeiss's Leuchtbild, even from 1.4 to 1.45,

so that a dark field can be had with an oil-immersion objective of 1.3 aperture. The low-apertured (histological) oil-immersion objectives, both achromatic and apochromatic, made especially to accompany these condensers of lower aperture, are so useful in ordinary microscopical work that their manufacture will probably not be discontinued, even if oil-immersion objectives of higher aperture are used with the dark field. It has been found that resolution with these condensers is often equal to that of a bright field of the same aperture (Beck, Nelson, Merlin); but the reason for this is not apparent yet. Theory seemed to postulate a resolution equal to that of the aperture of the objective added to the highest aperture of the condenser and divided by 4 (Siedentopf).

Other Discoveries and Improvements.—Siedentopf's binocular attachment (Bitumi or Bitukni), and similar arrangements by others, have aided the change from monocular to binocular (stereoscopic or non-stereoscopic), which is taking place in instruments for long-continued work. Among other late discoveries may be mentioned the experimental proof by Beck of the advantage of the use of a small source of light, or a diaphragm on the source of light—a principle which has in another form been long upheld by Nelson. This involves the use of corrected condensers, and the largest possible condenser cones—the advantage of which has been fully demonstrated by Nelson (101), Conrady (48, 49), and Beck (32, 33).

Other improvements are: the extended use of low-power binocular magnifiers after the pattern of the Greenough; the formation of an objective from rings containing the lenses, which are assembled in a tube, instead of being screwed together (Zeiss, Bausch and Lomb); the aspheric condenser (Zeiss, Bausch and Lomb); the homal projection lenses for photography with a flat field (Boegehold and Koehler); and the miniature camera attachment to the microscope employing these homals (Siedentopf).

Minor improvements of this century are the use of yellow-green glass, or Wratten light filters (Spitta, Mees);

the use of daylight glass (Gage) or tungsten-to-daylight film (Wratten); the making of a special series of colored glasses (Chance); and the improvements in electric lights which resulted in the C-Mazda, the tungsarc (or point of light), and the 6-volt, thick coil or tungsten-ribbon lamp, with pyrex glass.

THE FUTURE OF THE MICROSCOPE

This is of course speculation, and is no doubt tinged with the individual preferences of the writer, even when he tries to be impartial.

Superfluities.—It is the writer's opinion, as already said, that the following are, for the worker in biological matters (including usually the bacteriologist), superfluous on the modern standard microscope for high-power work:

1. *The Concave Mirror.*—Petri dishes are probably best examined with the Greenough, where the concave mirror is useful. (The amplification of the Greenough has lately been extended.) The concave mirror may then perhaps well be omitted on the standard monocular microscope or the monobjective binocular.

2. *The Uncorrected Condenser.*—This is optically a relic of the early days of Koch, nearly 50 years ago. It has been retained, partly because its focus need not be changed much, and partly no doubt because of the name of Abbe which has somehow become attached to it, rather than to his good achromatic condenser. The discovery that the source of light must be small for the successful use of 7⁄8 or 9⁄10 condenser cones, and that such cones give the best representation of the object, apparently renders the uncorrected condenser an anachronism for high-power work.

3. *The Large Centering Substage.*—This is intended to correct the errors of centering of objectives and condensers. Such errors in objectives on the nosepiece may be reduced to a minimum by the opticians. Errors of importance in centering of condensers and the sleeve of the substage should not exist. For condensers with large lenses, special centering may be not often needed; unless there has been

carelessness in the construction or in the care of the apparatus. For small condensers, and especially for dark-field condensers with a narrow range of aperture (such as Nelson's Cassegrain), exact centering of the condenser is needful for the highest objectives. The range of motion needed is (or should be) usually less than a tenth of a millimeter. A separate small centering collar for each such condenser seems practically best, for it may be set once for all for each. It need not have large screw heads. The eccentric device used on the Zeiss cardioid of 1925 is simple and good. It must be remembered that there is usually only one highest objective on the nosepiece for which the centering of the condenser should be correct to a few hundredths of a millimeter, while in practice the centering is often done with a low objective. A professional microscopist cannot afford to waste time on a large centering substage, with large loose screws having a possible range of several millimeters. The writer has had such a substage for years, and it required testing continually before beginning work. The accuracy of the maker can usually be trusted for centering, and, in fact, the centrality of the iris diaphragm with the condenser lenses appears to be taken on trust by all. A large neglected centering substage with screws wrong is worse than useless, and in the press of work these screws are likely to be neglected. The writer prefers, for example, to the large centering substage, the centered sleeve of Zeiss, with the tightening screw, on which two water-immersion condensers of other makers (Bausch and Lomb, and Leitz) center well, and have been used daily for several years. There are three adjusting screws turned by a screwdriver.

4. *Traversing and Rotating Iris.*—Another arrangement which appears useless to the writer (except for the testing of objectives, which can however be done without such apparatus) is the *traversing and rotating movements of the iris*, still retained in the Abbe illuminating apparatus. Oblique light, which was fashionable when Abbe published his account of this apparatus in 1873, has been now replaced

by wide cones. The writer does not know how it is with other biological workers, but when he has to work with a microscope provided with this traversing and rotating iris, he puts balsam on the cogwheel and rack to stop the traversing, and wires the milled handle to the stage to stop the rotating. Then only he can work the iris with steadiness.

Color Filter.—The writer thinks, now that artificial light is mostly employed for microscopical work, that nearly every microscope should be provided with daylight glass, and also yellow-green glass (or the corresponding Wratten gelatin films). Some means of regulating the intensity of the light should be found in every microscope box, and three or four grades of neutral, or blue-tinted, or yellow-green glass would usually suffice.

Sliding Bar.—English microscopes often have (or had) a sliding bar on their square stage. This is usually absent from the square stages of the continental microscopes. It is useful for searching, with the microscope inclined, in the absence of a mechanical stage, or of an object traverser; and in such case, might perhaps well be on the standard microscope with square stage. The writer has used the Detto sliding bar with satisfaction for years.

Monochromatic Objectives for Green and Violet.—Von Rohr calculated one high-power monochromatic objective for a special wave length of ultra-violet light (in the cadmium spectrum). We do not yet, however, have a monochromatic objective for the bright-green line of the mercury-lamp spectrum, which should be excellent for visual work (Barnard). Objectives might also be made corrected for the short range of the spectrum passed by a definite yellow-green screen, used with a definite tungsten electric light. Also, for the blue or violet light passed by another definite screen, to be used for photography alone. Such a pair of objectives would replace one apochromatic objective, and need not have color corrections. The advantage would be that those who did not want to photograph would not have to take an objective also corrected for photography, as are the present apochromatic objectives. Such

objectives should be manufactured at a lower cost than the apochromatics; and the photographic objective for blue or violet light would perhaps be especially useful. For photography is one point in which microscopy appears most backward, as compared with astronomy.

Medium-power Microscope.—The writer has already suggested a medium-power microscope, with erect image and parallel tubes, made by combining the Swan and Porro prisms. It is possible that it could be made with only four reflections on each side.

Water Immersion.—In the future it is to be hoped that the water-immersion objective, which was driven out, for a time after 1878, by the oil-immersion objective, so successfully used by the bacteriologists, would come again into use for the examination of structures and organisms of thickness exceeding a few microns in water and watery fluids. Here it is superior, if skilfully used, to the oil-immersion objective of the same aperture. A water-immersion achromatic condenser calculated for standard slides is also a desideratum.

Monobromide of Naphthalin Immersion Objective.—This can be used without a cover-glass (with a 30-millimeter collar) on well-stained (or unstained) thin smear preparations of bacteria, or pressed-out early stages of chromosomes in the reduction division.

Photography.—It may also be hoped that the future will see a greater use of photography, the specimens being specially prepared and stained with a view to photographing them and working on (measuring) the photographs, as is done in astronomy. Books on minute anatomy or cytology should certainly be illustrated with abundant good photographs—and would be, were such available (as they are in bacteriology).

Light.—As has been already noted, the use of ultra-violet light for photographs might be extended by some of the biological institutes, which can afford the necessary expenditure of money and time. Illustrations produced by the objective of 2.5 equivalent aperture, might, one would think, be plentiful in the future.

Half-silvered Cube.—The half-silvered cube (Swan cube) is fitted for vertical illumination, as well as for use in the Abbe camera. (It has been so employed by the Spencer Lens Company.) It shows the pencil point clearly, in the camera lucida.

Dark Field.—Promising for further research is the use of the dark field with water-immersion objectives of 1.2 or 1.25, on objects in watery fluids in their natural state or fixed. It is perhaps possible that the modern study of stained balsam preparations may be widely supplemented by the study of unstained objects, as was done in the early days of the water-immersion objective.

Source Diaphragm.—The removal of glare by the use of a sufficiently small diaphragm on the source of light seems to the writer one of the important points for future microscopy, both in routine and research work.

CHAPTER XXIII

LITERATURE OF THE MICROSCOPE

Books and Papers.—Books on the microscope can mostly be divided into books for beginners, books (and original papers) on high-power work, and books (and papers) on the theory of the microscope. The articles in the *Journal of the Royal Microscopical Society* and the *Zeitschrift fuer wissenschaftliche Mikroskopie* are often more instructive than any books, being usually first hand; while much of most books must necessarily be second hand. The advanced mathematics of the microscope, however, is mostly of interest only to the calculators of new objectives. The voluminous literature on the objects seen with the microscope, and the excellent manuals of methods for preparing objects, such as Bolles Lee's "Vademecum," for animal, and Chamberlain's manual, for plant preparations, are not under consideration here.

Books for Beginners.—E. Bausch's few pages (26) on how to use the microscope are trustworthy, and have no doubt been useful to many when making their first acquaintance with the instrument, and will be useful to many more. The same may be said of the excellent booklets of instructions published by C. Zeiss, the Spencer Lens Company, Watson and Sons, and E. Leitz. The first volume of C. Beck's book on the microscope (30) contains a handy account of the microscope, suitable for those beginning to use one. It includes some practical hints. The booklet by Ehringhaus (63) was recommended by Erfle as a convenient introduction to microscopy. It is an accurate account of the modern microscope and its accessories, but contains little practical matter. Gage's well-known book on the microscope (66), now in its fourteenth edition, contains an elementary account of the

microscope, clear enough to be comprehended by any student. It offers a number of practical hints for the beginning microscopist; and also gives abundant details as to the methods and organization of class work in histology and microscopical embryology. It gives especially full accounts of illuminating, drawing, and modeling methods. Metzner's 1928 edition of Zimmermann's book on the microscope (98*c*) contains descriptions of new apparatus and new methods, and general elementary instructions.

Books on High-power Work.—Of the books which deal with high-power work, Spitta's thick volume (127) gives among other things the results of his experience with photographing diatoms and testing objectives. He was one of the first systematically to employ green glass, and the yellow-green Wratten filters. The book also includes excellent elucidations of the elementary mathematical points of microscopy, often written by Conrady who assisted Spitta more or less. Beck's second volume (33) contains his important experiments on limiting the size of the source of light, with reference to resolution and glare. There are also many practical hints from the point of view of the manufacturing optician. Coles's "Critical Microscopy" (46) is mainly a first-hand account of the successful methods of the author, in the microscopy of blood parasites. The methods described are based on E. M. Nelson's many published papers. The book is practical throughout, and the present writer highly recommends it, especially to medical microscopists. Dallinger's 1901 revision of the first volume of Carpenter's classical microscope book (43) is also partly based on Nelson's practical work, but it is now rather out of date. It contains an exposition of the diffraction theory of the microscope revised by Abbe himself. The most important part is perhaps the full history of the microscope. Metzner's recent volume (98*c*) gives a good account of photography with the microscope, and discusses various matters relating to high-power work.

Books on the Theory of the Microscope.—With regard to the theory of the microscope, the most important work of general interest is, of course, the first volume of Abbe's collected papers. Here we have a man of genius bending his energies to the improvement of the microscope. These papers are semipopular, in that mathematics is almost wholly omitted. Abbe's mathematical discoveries are given in the books of Czapski, von Rohr *et al.*, and Lummer. All Abbe's papers are important, but perhaps the most interesting are the original account of the diffraction theory (2); the reply to an attack on his theory (11); the theory of binocular vision (10, 12); the descriptions of the invention of the oil-immersion objective (6, 7), and of the apochromatic objectives (17); and the study of the proper focal length for objectives of different apertures (14). The writer owes his interest in scientific microscopy mainly to the reading of these papers. Dippel's book (60), except as a record of the state of microscopical affairs in Germany before 1882, is chiefly valuable for Abbe's account of his theory, which he gave to Dippel for insertion. The new edition (1924) of Czapski's book on the theory of optical instruments after Abbe (57), contains an excellent compressed, more or less mathematical, account of the microscope (as well as of other optical instruments). The interesting chapters for our purpose are V, XI, XII, XIII, XV, XVI and XIX. One may find in this work a good account of microscopical calculations, and also a very complete bibliography of optical discovery. Koehler's treatise on the hand lens and the simple microscope (86) is a full and elegant theoretical exposition, containing many points of interest. It would be useful to have the compound microscope treated in a similarly full theoretical manner.

Papers on Large Cones.—Among the important articles on the microscope since Abbe's time are the following on large cones of illumination: Nelson, in the *Journal of the Royal Microscopical Society* (101) and in the *English Mechanic*, upheld his well-known method of critical illumination,

with a three-quarters or seven-eighths condenser cone, and a small edgeways image of the flame. All his papers will well repay reading, and they usually contain useful practical hints. Hartridge performed some important experiments with the microscope, especially in testing various methods of illumination, including Nelson's method, comparing also opal glass with the direct flame (71). All his papers, mostly in the *Journal of the Royal Microscopical Society* and the *Journal of the Quekett Microscopical Club*, are uniquely valuable. Beck had two papers (29, 32) in the *Journal of the Royal Microscopical Society* on glare, and these papers are quite important, since he finds the reason for Nelson's use of a small image of the flame edgeways in the field, for critical vision. Conrady in two theoretical papers (48, 49) in the *Journal of the Royal Microscopical Society*, supplies the reasons on the diffraction theory for the use of a large cone, thus settling a matter which had been long the subject of debate.

Papers on Dark Field, and Submicroscopic Work.—On dark-field condensers several articles have appeared, among the most important being the following: Siedentopf's papers, on the ultramicroscope (123), on vision of submicroscopic particles (117), on vision of submicroscopic lines (118), and on dark-field illumination (120) with a new dark-field (cardioid) condenser. Jentzsch had a useful paper (77) on dark-field illumination with a new (concentric) condenser. Metz (97) calculated an achromatic aplanatic condenser especially for a dark field, in which it gave somewhat better results than the special condensers (paraboloid or concentric) then available. His description is useful to the practical microscopist. Berek (38) explained some of the remarkable color effects produced when stained bacteria are seen on a dark field. Coles (45) found a new way of observing stained spirochætes, etc., dry, on a dark field, with an immersion condenser.

Booklets on Color Screens.—With regard to color screens the following are useful: The atlas of absorption spectra by Mees (95), and the booklet (62), probably abstracted from it, on Wratten light filters. These give thorough

measurements of the light at all parts of the spectrum for each of a hundred or so definite color filters, made of dyes in gelatin cemented between optical glass.

Other Literature.—The catalogues and leaflets issued by the different leading opticians often contain new and useful information, especially those of Zeiss, and also *Watson's Microscope Record.* Von Rohr has written good popular descriptions of binoculars (108), spectacles (107), etc. These are especially strong on the historical side.

Practical Points

1. The *Zeitschrift fuer wissenschaftliche Mikroskopie*, the *Journal of the Royal Microscopical Society* and *Watson's Microscope Record*, are probably the most useful periodicals.
2. For beginners, Gage's book on the microscope is well adapted.
3. For high-power microscopy, Coles's "Critical Microscopy" is quite suitable.
4. For the theory of the microscope, the first volume of Abbe's collected papers is inspiring.
5. Excellent practical papers on microscopical details have also been written by Nelson (101), Hartridge (71), Coles (47), Ainslee (20, 21), Beck (29, 32), Siedentopf (121, 122), Koehler (82, 83, 85), Mees (95), Metz (97), Berek (38), and Jentzsch (76, 77).

CHAPTER XXIV

DISCOVERIES WITH THE MICROSCOPE

Hypotheses.—Discoveries with the microscope are like most other discoveries in science—they usually come in the course of planned work, and by the aid of hypotheses. Hypotheses may be classed as unused hypotheses, and working hypotheses. A new hypothesis is, or should be, the best guess a capable worker can make. If it stops there, it is an unused hypothesis. A new hypothesis before it becomes current should first be confronted with the relevant facts. This is work for the originator of the hypothesis. If the hypothesis fits the relevant facts, it can then be used and put to work. The work required is that of prediction. A hypothesis which gives successful predictions is a satisfactory working hypothesis. When generally accepted, it becomes a theory. A theory is useful as long as it enables predictions to be made.

Methods of Discovery.—To the writer, it seems (as it did to the greatest naturalist of last century) that the most profitable kind of investigation is usually that which is guided by some working hypothesis—that is, a hypothesis which has already been confronted with the known relevant facts. Hence, the first kind of investigation is that undertaken into the unknown with the guidance of an important new working hypothesis. Another kind of investigation is that which aims at the confirmation or extension of other work. This is both useful and necessary. Confirmations of a great, new theory, like that of Mendel, are usually of the nature of extensions. This is a safe and sure method of investigation, and the results are rarely without value. Another method of discovery, which may be particularly fruitful, is the invention and application of a new method of investigation, such as Koch's use of the

plate-culture method for bacteria. To the discoverer of a new method, an unknown region is opened up. Finally, we have the random method: trying in all directions, trusting to industry to find something of sufficient importance.

Two Great Discoveries.—It is the writer's opinion that there have been two discoveries, wholly due to the microscope, of such fundamental nature that they may be placed among the few greatest discoveries. Both these discoveries were due to the achromatic microscope. The long period of about two hundred years which passed while the uncorrected magnifying lens and the compound microscope with the uncorrected objective were in use, seems to have been mainly devoted to detail.

The Cell Theory of Organisms.—The first great microscopical discovery was probably the cell theory of living organisms. "Every cell from a cell" was, and still is, the foundation of ontogeny and even phylogeny. It gives the writer, as a botanist, pleasure to note that this discovery was made at least as much from microscopical observations of plants as from studies of animal tissues. The important deductions are: that each plant and animal normally comes from a single cell; that all the different tissues are formed by (usually) permanent changes occurring in certain of the cell progeny of the original cell; and that the faculty of reproduction, and of that partial reproduction called "regeneration," shows, in the tissues of plants and animals, all grades—from complete reproduction by any cell, to the absence of any cell division at all. These more or less permanent changes in the cells as they multiply to build up the tissues are almost without any explanation today, and remain a challenge to investigators. Even tissue cultures do not seem to have given a clue to the remarkable stability of the tissues when *in situ*.

It was found also that two reproductive cells, usually of different ancestry and appearance, combined to form the original cell of each new being; but why this happened was not clear.

Thus the cell theory gave a vision of the marvels of ontogeny, but the problem of the origin of different cell classes (apparently) still waits for its Darwin to provide a first approach to a solution.

In ontogeny we are usually certain that each individual comes from one cell, and the indisputable sequence of changes from one kind of embryo to another in the course of ontogeny is only to be equalled in importance by phylogeny when dealing with the experimental change of kinds of beings, such as chromosomal mutations and gene mutations.

The Chromosome Theory of Inheritance.—The second great microscopical discovery is, the writer thinks, the chromosome theory of inheritance. Before the chromosomes could be successfully brought into such a theory, it was, of course, necessary to know what inheritance was; and, for a long time, no one but Mendel had the insight and patience to find this out. The material for the chromosome theory was sufficient, when Mendel's results were rediscovered, to allow of the enunciation of a promising working hypothesis; though natural conservatism seems to have delayed its general adoption until more evidence had accumulated in its favor.

The chromosomes afford not only a theory of inheritance, but the basis for a theory of life. For all, or most of the living structures, such as cilia, muscle fibers, nerve threads, and gland cells are products, so far as we know, of the chromosomes. Hence, a theory of life is a theory of the chromosomes.

One thing, as already noted, the chromosomes do not apparently afford yet, and that is a satisfactory working hypothesis of ontogeny, to say nothing of a theory.

Visibility of Genes.—It remains (*inter alia*) for the microscope to complete the chromosome theory by the thorough investigation of the genes. The counting, and especially the identification, of these would perhaps give support to some hypothesis of ontogeny. For if genes are found to be lost (by non-division at any stage), the non-reversibility

of many ontogenetic cell generations would be accounted for. (The writer has already counted the chromomeres, whose number is possibly equal to that of the genes.) It may well be remembered that the genes are not only at the foundation of the theory of inheritance, but also at the basis of any future theory of life itself.

Utilitarian Discoveries.—There are, no doubt, other important discoveries, made with the achromatic microscope, which from the standpoint of applied science, are more important at present than the cell theory or the chromosome theory. Among such are, above all, the discoveries which constitute the science (and art) of bacteriology (including here all microscopic parasites). But these are, in the writer's opinion, not sufficiently contributory to the science of biology to be ranked among the few great fundamental discoveries in *pure science*, however high they deservedly rank in applied science.

Future Discoveries.—Further important biologcial discoveries with the microscope will perhaps come from a triple combination. The method of quickest fixing will have to be combined with the sharpest staining process, and also with the most correct microscopy. Colors of stains should be adapted to the yellow-green (or other) screens in use. Photographs taken with the microscope will doubtless be sharp, if the laws of optics are obeyed as well as they are in the taking of motion-picture photographs; and such sharp photographs will perhaps lead to discoveries, as is the case in astronomy.

These sentences refer to biology, but it seems to the writer that it is in biology especially that many important discoveries with the microscope have been made, and are to be expected in the future.

CHAPTER XXV

A HUNDRED MICROSCOPICAL OBJECTS OF BIOLOGICAL INTEREST

The following list of a hundred objects for the microscope includes preparations considered to be of more or less value to pure biology. Some have not been tested by the writer, but are suggested on good grounds. Some are temporary preparations, made only for purposes of study. The employment of the preparations for further investigation is sometimes suggested. An indication of the literature is often given.

PLANT OBJECTS

1. Chromosomes with Chromomeres, in the Embryo Sac of *Galtonia candicans*.—Embryo sacs are to be cut open at the right stage. This can be determined by putting pieces of the walls into iron-acetocarmine, and examining for division stages of the endosperm nuclei. The writer fixed the opened ovules in Hermann's mixture, and stained with Mayer's hæmalum; but it would probably be as well to fix with chrom-acetic-formalin and stain with iron-brazilin, or iron-hæmatoxylin in 70 per cent alcohol. The air pump may be needed to remove bubbles from the opened embryo sacs. After fixing, the endosperm layer is to be dissected out in weak alcohol, stained, flattened, and mounted in (balsam or) immersion oil, under a cover-glass 0.17 millimeter thick, on a slide of standard thickness. It is to be viewed with yellow-green or blue-green light, and a fluorite or apochromatic oil-immersion objective of 1.3 aperture, with 7/8, or 9/10 condenser cone. More investigation is needed on chromomeres, as to their numbers and appearance in somatic chromosomes. (Strasburger, S. Nawaschin, Newton, Belling.)

2. Segments of Chromosomes Connected by Threads in Pollen Grains of Uvularia.—Plants of Uvularia wintered outside are to be put in a warm greenhouse in February. Flowering shoots are to be examined as soon as they appear above ground. Pollen grains at the right stage were fixed and stained by the writer in iron-acetocarmine; but they might doubtless be smeared, fixed in chrom-acetic-formalin, and stained with iron-brazilin, or iodine gentian violet. Chromosomes VI and VII show a fiber between their segments, sometimes as long as the longer segment. By local pressure, the cells in acetocarmine can be flattened and some of the cytoplasm pressed out, so that the chromosomes show more clearly. (S. Nawaschin, Belling.)

3. First Anaphase of Chromosomes in Pollen Mother Cells of Haploid Plants.—Haploids can sometimes be obtained by exposing plants to alternations of cold and heat, or by crossing with pollen of related species which rarely fertilizes the ovules. An anther can be tested from each bud until the right stage is found, the contents being pressed out in iron-acetocarmine. Smears may be fixed for 2 to 5 hours in chrom-acetic-formalin, mordanted in iron alum for 24 hours, stained from 2 to 12 hours in brazilin, or alcoholic hæmatoxylin, differentiated in iron alum, and mounted in immersion oil, with covers 0.17 millimeter thick. Cells showing the desired stages are to be flattened by pressure on the cover with the point of a thin-bladed penknife. If any of the chromosomes can be identified by size or shape, the question is if the assortment at first anaphase is a purely random one. (See, for Datura, Belling and Blakeslee; for Nicotiana, Clausen and Goodspeed; for Triticum, Gaines and Aase; and for Crepis, Hollingshead.)

4. Ultimate Chromomeres of Lilium, Aloe, and Fritillaria.—Plants of *Lilium pardalinum* are grown to flower in a shady place. Buds of various lengths under 20 millimeters have one anther removed, to be tested in iron-acetocarmine. At the pachytene stage, the remaining anthers are removed, split lengthwise, dried with filter paper, cut across once, put across the slide *en échelon,* and

smeared, at one stroke, by another slide. (The juice from anther tissue is apparently fatal to optimum fixation.) The smears are fixed immediately in chrom-acetic-formalin, mordanted in iron alum for 24 hours, and stained 2 to 3 hours with brazilin. They are then differentiated in iron alum for a few minutes or so, cleared with cedar oil, and mounted in immersion cedar oil under large covers of 0.17-millimeter

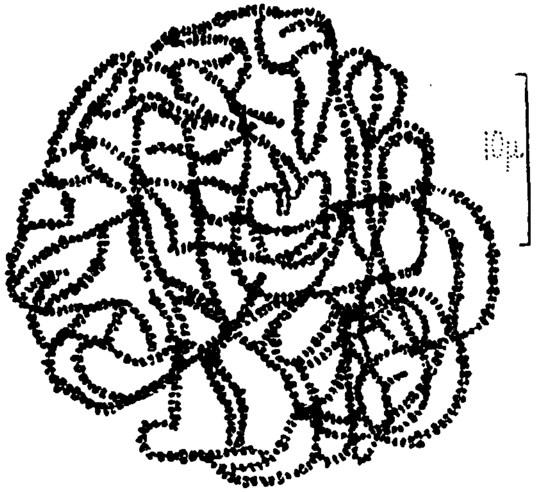

FIG. 24.—Pollen mother cell of *Lilium pardalinum*, showing half the pachytene coils, with over a thousand double (or quadruple) chromomeres. Smear fixed and stained as in Fig. 23. Camera drawing with fluorite objective 100 of 1.3 aperture, Bitumi binocular attachment, and eyepiece magnification of 12.5.

thickness. Such covers permit, by their elasticity, of pressure being applied on a particular cell or group of cells without fracture of the cover. Chromomeres show well under a fluorite 100 objective, of 1.3 aperture, with a full cone of light from a corrected water-immersion condenser, and Wratten yellow-green film No. 57A. The chromioles composing the ultimate chromomeres can be observed better after pressing sufficiently on the cover-glass with a long-bladed penknife to flatten the cells somewhat (*see* Fig. 24).

Buds of *Aloë striata*, about 5 millimeters long, also show the ultimate chromomeres well, when smears are stained as above and mounted in immersion oil. *Fritillaria*

lanceolata, too, gives excellent preparations of chromomeres by this method. (Wenrich, Gelei, Belling.)

5. Contraction of the Pachytene Bivalents in Agapanthus and Kniphofia.—Young anthers of *Agapanthus umbellatus* and of *Kniphofia aloides* at the right stage are dried with filter paper, smeared, fixed with chrom-acetic-formalin for 2 to 5 hours, mordanted for 24 hours, stained with iron-

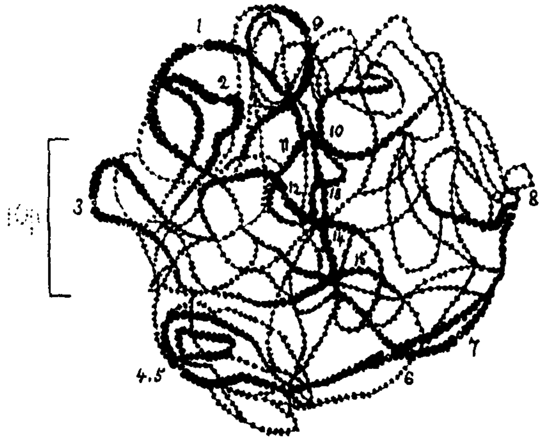

FIG. 25.—Pollen mother cell of *Agapanthus umbellatus*, showing the pachytene coils. The 15 bivalents are thickened around the points of constriction where there is a special corpuscle. The chromomeres are visible. Fixation, etc. as in Fig. 24. Camera drawing.

brazilin for about 2 hours, slightly differentiated, and mounted in immersion oil. Selected cells are slightly flattened by due pressure on the cover-glass. In Agapanthus, 15 thickenings at the pachytene stage are usually to be observed, corresponding to the 15 bivalents. Most bivalents will show a clear constriction with one (or two) polar granules in it. In Kniphofia six such thickenings are readily visible, corresponding to the six bivalents. (Belling.) (*See* Fig. 25.)

6. Numbers of Chromosomes in the Pollen Grains of Triploid Hyacinths.—The bulbs of the triploid hyacinths are usually at the right stage (late in October or) early in November. (King of the Blues is rather late.) The bulbs can be kept dry and cut open when required, or they

can be rooted over water. The common triploid hyacinths, Lady Derby, Grand Maître, Queen of the Pinks, and King of the Blues, can be used. Anthers are to be squeezed out in iron-acetocarmine, till young pollen grains of the right stage are found. These are recognizable by a metaphase plate of chromosomes filling half or more of the pollen grain. (It takes longer for the stain to penetrate the wall of the young pollen grain than that of the pollen mother cell.) A number of smears should be made from different buds, tested, left some time to stain, covered, and set aside for an hour or two. Then those that show many metaphases in the pollen grains may be sealed with melted paraffin. Wait a few days before examining. Use a water-immersion objective (such as Zeiss apochromatic 70 with collar) with yellow-green light. See whether the numbers of extra chromosomes, short, medium, and long, vary according to the binomial distribution, or not (Belling, Darlington, Lesley). The hyacinth smears of pollen grains may also be fixed in chrom-acetic-formalin and stained with brazilin.

7. Numbers of Nodes in the Bivalents of Lilium.—Flower buds about 20 millimeters long, or less, will often give the desired stages, in *Lilium longiflorum*, grown in a cool greenhouse, early in the year. The anthers from a flower may be examined at intervals. Each is to be split lengthwise, cut into two, dried on filter paper, pressed out into a drop of iron-acetocarmine, and left for a time to stain. All anther debris is to be removed. After covering, superfluous fluid is sucked away with blotting paper, and the slide left for a short time before sealing with melted paraffin, so that capillary pressure may flatten the cells. Then the slide is put away for a week. A water-immersion objective, with a correction collar, gives the best images. Chosen cells may be flattened, or the cytoplasm and chromosomes squeezed out, by pressure on the cover with a mounted needle, if the cover-glass is large and thin. The nodes can be counted in the bivalent chromosomes of early, middle, and late diaphase, in cells in which all 12 bivalents are separable. So the difference in the average number of

nodes at earliest and latest diaphase can be found (Belling). Iron-brazilin mounts can also be made, but the nodes are not so easily counted in them.

8. Numbers of Nodes in the Bivalents of Tulipa.—Make iron-acetocarmine preparations from the pollen mother cells of ordinary diploid tulips, the bulbs being cut open in October. Or make smears, fix in chrom-acetic-formalin, and stain in iron-brazilin for 2 or 3 hours, or in alcoholic iron-hæmatoxylin. Mount in immersion oil under covers 0.17 millimeter thick. Press out cells in early, middle, and late diaphase. Count nodes in all twelve bivalents. (Newton, Belling.)

9. Effects of Changes of Temperature on the Reduction Division in Hyacinthus.—Yellow Hammer is an easily identified diploid variety of *Hyacinthus orientalis*. In October, or early November, when the pollen mother cells are (*a*) at the leptotene or pachytene stage, or (*b*) at the first metaphase, alternate the bulbs between the ice chest and the hothouse. Mount the first metaphase, or the young pollen grains, in iron-acetocarmine. Look for cases of non-conjunction, non-disjunction, non-reduction, and non-division. Also for cases of fracture at the constriction, and for union of two chromosomes. (Belling, Michaelis, Sakamura and Stow, de Mol, Shimotomai.)

10. Effects of Changes of Temperature on the Maturation Divisions in Uvularia.—Treat plants of *Uvularia grandiflora* or *U. perfoliata* as in **9** with heat and cold. Mount specimens in acetocarmine, and also fix smears in chrom-acetic-formalin. Investigation as in **9** (Belling).

11. Trivalents in Triploid Hyacinths.—Bulbs of true triploid hyacinths, such as, King of the Blues, Lady Derby, Queen of the Pinks, or Grand Maître, are put over water (or cut open dry). The maturation divisions take place in October or November. Iron-acetocarmine preparations are to be compared with similar preparations of the diploid hyacinth (Yellow Hammer, for example). The late diaphase or early metaphase is the best for study, and a water-immersion objective should be used (Belling).

12. Trivalents in Triploid Tulips.—Bulbs of triploid tulips, such as, Keizerskroon, Massenet, or Pink Beauty, can be examined by cutting open in September or October, or sometimes in November. Besides iron-acetocarmine preparations, fixing with chrom-acetic-formalin, and staining the smears with iron-brazilin, or alcoholic iron-hæmatoxylin, show the diaphase well. To be compared with the common diploid tulips. (Newton and Darlington, Belling.)

13. Trivalents in Triploid Tomatoes.—Triploid tomatoes occasionally occur. They may be picked out by bearing few fruits and seeds, and may be identified by their pollen. The pollen mother cells can be stained with iron-acetocarmine; or smears can probably be fixed in chrom-acetic-formalin, and stained with iron-brazilin or iodine gentian-violet, or iron-hæmatoxylin in 70 per cent alcohol. (Mann, Lesley.)

14. Trivalents and Quadrivalents in Triploid and Tetraploid plants of ***Datura stramonium.*** – Tetraploid plants and branches occasionally occur. They may be recognized by the larger flowers, pollen grains, and seeds. Triploids may be sometimes produced by pollinating tetraploids from ordinary diploid plants. The pollen mother cells fix and stain excellently in iron-acetocarmine. They can also be fixed in smears by chrom-acetic-formalin, and stained for several hours in iron-brazilin, or iron-hæmatoxylin in 70 per cent alcohol. The cells must be squeezed flat by pressure on the cover. (Belling and Blakeslee.)

15. Non-reduction.—Examine especially the first and second metaphases of haploid plants (Datura, Nicotiana, etc.). Make new haploids if necessary, by the two methods given above. (Haploids of lilies or hyacinths would be useful if they could be made.) Also expose ordinary diploid Daturas, etc. to cold in an ice chest, and then put in a greenhouse. See if (*a*) there is always an interphase before the non-reductional division of the full number of chromosomes; or if (*b*) there is no interphase; or if (*c*) there is an interphase in some plants and not in others;

or if (*d*) there is sometimes an interphase and sometimes not in the same plant. Use preferably smears fixed with chrom-acetic-formalin and stained with iron-brazilin, or iron-hæmatoxylin in 70 per cent alcohol. (Sakamura, Belling, Rosenberg, Matsuda.)

16. Amphidiploid Species Hybrids.—These theoretically interesting plants occur rarely in the first filial generation (or later) in difficult species crosses. Some of these are *Nicotiana glutinosa* by *N. tabacum; Primula floribunda* and *P. verticillata;* Raphanus and Brassica; Fragaria spp.; Triticum and Aegilops; and Solanum spp. If some of these can be remade, or seeds of them obtained, it is instructive to compare the first metaphase of the constant amphidiploid hybrid with the metaphases of its two parental species. The cells of the Nicotiana spp. and of their constant hybrid stain well if smears are fixed in chrom-acetic-formalin and stained for several hours in iron-brazilin, followed by several hours of extraction in iron alum. (Clausen and Goodspeed, Karpechenko, Tschermak and Bleier, Ichijima, etc.)

17. Leptotene, Zygotene, Pachytene, and Diplotene Stages of Allium.—An Allium labelled *A. triquetrum* was used by the writer and was superior to *A. cepa;* but perhaps other species are also good. Smears are to be made from the buds at the right stage, fixed for 2 to 3 hours in chrom-acetic-formalin, washed 10 minutes in chrom-acetic, run through the alcohols, mordanted for 24 hours, stained in brazilin for 24 hours, well differentiated, and run through alcohol plus cedar oil and cedar oil plus xylol, into cedar oil. Covers should be 0.17 millimeter thick. The cells are to be squeezed individually with a flexible penknife blade, so that much of the cytoplasm is squeezed out of the cell, leaving the chromosomes. A 100 fluorite objective, with a condenser giving a corrected cone of 1.2, a 12.5 compensating eyepiece, a diaphragm on the radiant making it equal to the source-field, and Wratten screen No. 57A, give nearly optimum results with a sufficiently strong, but not too strong, light. Sometimes the preparations show well, for a time, in hyrax.

18. Chromosomes Not Conjugating in Species Hybrids of Canna.—Pollen mother cells of the canna Austria (Cloth of Gold), or the canna clone Italia, are pressed from short cut segments of the anthers into iron-acetocarmine, and allowed to stain well before covering gently. (Iron-brazilin smears may be also tried.) The water-immersion objective and yellow-green light are to be used. How many bivalents are to be seen, and are these united at one or both ends? There are 18 somatic chromosomes. They should be compared with the 9 bivalents of a wild canna, such as *C. flaccida* of Florida. (Belling.)

19. Trivalents of Triploid Cannas.—Plants (or cut flower stems) of the true triploid cannas, Gladiator and Firebird (Burpee), and probably Wyoming, are exposed to cold (natural or artificial) for a day or so, and returned to heat. Their pollen mother cells are then to be examined, as in **18.** The nine trivalents can be studied to ascertain the proportional numbers of the different configurations. (Belling, Kuwada, Kihara.)

20. Trivalents, Bivalents, and Univalents of Triplex Cannas.—Preparations are to be made as in **18.** The cannas Pennsylvania and Indiana do not have nine trivalents, but a mixture of trivalents, bivalents, and univalents. They probably came from back-crosses of the first filial plants of a species cross (such as Austria and Italia are stated to be) with pollen from a parental or some allied form, non-reduced egg cells alone being viable. If none of the univalents divide at the first division, the total number of chromosomes at the first anaphase will be 27, as in true triploids. Several others of the orchid-flowered cannas resemble these two. (Belling.)

21. Trivalents, Bivalents, and Univalents of *Hemerocallis fulva*.—Good preparations can be obtained with iron-acetocarmine, and also with iron-brazilin. The latter require pressing out. This is apparently a triplex plant, possibly arising from an F_1 species hybrid, of which an unreduced egg cell was fertilized by a pollen grain from one of the parents. Absence of division of univalents at the

first division seems to be proved by the total of the two first anaphase or second metaphase groups being apparently $3n$, that is, 33. This is also shown by the equality of the two groups resulting from each second anaphase. Make preparations from root tips fixed in chrom-acetic-formalin, run through the alcohols without washing, cut in paraffin, washed in alcohol for some days, and stained with iron-hæmatoxylin in 70 per cent alcohol, or iodine gentian-violet (J. Clausen, 1926). Covers should be 0.17 millimeter thick. See if the total number of somatic chromosomes is 33. (Belling.)

22. Chromosomes in a Chain at the Diaphase and Metaphase of the Reduction Division in Rhoeo.—Pollen mother cells at the right stages are to be mounted in iron-acetocarmine, and also as iron-brazilin or iron-hæmatoxylin smears. They stain easily, and too intense staining should be avoided. Covers should be 0.17 millimeter thick. Chains are commonly complete, but are sometimes broken. Complete circles are sometimes found. Bivalents have not been seen by the writer. (Fresh Rhoeo plants can be grown from seed every year.) (Sands, Belling, Darlington.)

23. Chromosomes in Circles and Chains in Oenothera.—Iron-acetocarmine is commonly useless for study of the chromosomes, which are wholly, or nearly quite, obscured by granules. But one anther from each flower may be squeezed out in acetocarmine, and will show whether the stage is much too early or much too late. The anthers are cut up on a slide, from two to five tested flowers being used. The smears fix well with chrom-acetic-formalin, and stain excellently with iron-brazilin. If mounted in immersion oil they may be squeezed flat, and thereby improved. They give clear pictures when viewed with a fluorite 100 objective, a pair of 15 (or 12.5) compensating eyepieces, a corrected water-immersion condenser, giving 1.2 to 1.3 aperture, Wratten screen No. 57A, and a 3-millimeter diaphragm on the ground glass radiant. (Cleland, Hakansson, Belling.)

24. Formation of Sperm Nuclei in Pollen Grains or Pollen Tubes.—Cover the stigma of Datura, etc., with pollen. When the grains have just germinated, press them slightly under a cover-glass in iron-acetocarmine in which just enough crystals of chloral hydrate have been dissolved to make the pollen grains become transparent. Seal with melted paraffin. Examine after a few days.

25. Extra Chromosomes of $2n + 1$ Plants.—Such trisomic plants may be detected in the progenies of Datura, Nicotiana, Matthiola, Lycopersicum, etc., grown from buds exposed to changes of temperature. Or they may form most of the progeny of triploids pollinated by diploids. Prepare as in **3.** The chromosomes and cytoplasm may be squeezed from the cells. Proofs, as in **20,** that the extra chromosome of the trivalent, or the univalent, does not divide at the first division, may be looked for. (Belling and Blakeslee, Clausen, Frost, Lesley.)

26. Deficient Chromosomes in $2n - 1$ Branches of Datura, Etc.—These branches can be recognized by their different appearance, and (in Datura) by the flowers having half or more of their pollen grains empty. Preparation of pollen mother cells as in **3.** Proofs are to be found (in Datura) that the univalent chromosome does not divide at the first division, but does divide at the second division. (Belling and Blakeslee, Clausen and Goodspeed.)

27. Assortment of Chromosomes in Haploid Datura, Nicotiana, Triticum, or Crepis.—Haploids occur in the progeny of plants whose buds have been chilled and then warmed; or they occur in attempted distant crosses. Preparation of pollen mother cells as in **3.** The assortment is to be studied at second metaphase. Six sizes can be distinguished in Datura. The total of both second metaphase groups in Datura is twelve. Hence no univalents divide here at first metaphase. The other haploids may be tested for this. (Belling and Blakeslee, Clausen and Goodspeed, Gaines and Aase, Hollingshead.)

28. Fracture of a Chromosome in Secale.—Plants with eight pairs of chromosomes seem to occur normally in fields

of rye, as well as those with seven pairs. Pollen mother cells are to be pressed out under the cover-glass, from the cut anthers, in iron-acetocarmine. Smears may be made also, fixed in chrom-acetic-formalin, and stained with iron-brazilin, or with iron-hæmatoxylin in 70 per cent alcohol. The cells are united in cylinders, and require judicious subsequent pressure with a needle to free them. Investigations on the inheritance of the eight-chromosome form may be made. (Gotoh, Belling.)

29. Chromomeres of Tradescantia.—Pollen mother cells of *T. virginiana* at the first metaphase, or earlier, are pressed out into iron-acetocarmine, as in **3**. Good iron-brazilin smears can readily be made, but should not be stained too deeply, as may readily happen. In the excellent acetocarmine preparations, the cytoplasm and chromosomes are readily squeezed from the cells. The numbers of compound chromomeres can be counted in each metaphase or anaphase chromosome. In the iron-brazilin mounts the ultimate chromomeres of leptotene and zygotene stages can also be seen. (Sands, Belling, Kuwada.)

30. Chromosomes of the Three Wheats with Different Numbers.—Pollen mother cells of the three varieties or species of Triticum with 7, 14, and 21 pairs of chromosomes, respectively, are pressed out in iron-acetocarmine, as in **3**. Iron-brazilin smears are also made. Investigation may be carried on as to the sizes, shapes, and configurations of the bivalents. The first-generation hybrids of these wheats may also be examined as to the division of univalents at the first metaphase, using the tests in **20** and **21**. (Kihara, Sax, Thompson, etc.)

31. Second-metaphase Chromosome Groups in Pollen Mother Cells of Datura, Nicotiana, etc.—Preparation as in **3**. Cytoplasm and chromosomes pressed from the cell. An investigation might be made on the position of the largest and smallest chromosomes in the metaphase plates. (Belling.)

32. Sperm Nuclei of Flowering Plants.—Soon enough after self- or cross-pollinating, open ovary and fix ovules with

chrom-acetic-formalin. Uvularia, Hyacinthus, Datura, Pelargonium, or Oenothera seem worthy of trial. Wash in graded alcohols. Cut in paraffin. Wash sections in 70 per cent alcohol for a day or more. Stain with iron-brazilin, iron-hæmatoxylin in 70 per cent alcohol, or with iodine gentian violet. (Welsford, Sax, etc.)

33. Polyembryony of Citrus.—Pollinate an orange flower heavily. In due time, cut longitudinal sections in paraffin of the young ovules. Fix in chrom-acetic-formalin, after opening the ovary, or the larger ovules. Omit washing with water. Wash sections well in 70 per cent alcohol. Stain with iron-brazilin, or iron-hæmatoxylin in 70 per cent alcohol, or try iodine gentian violet. Contrast the adventitious embryos with the embryo close to the micropyle resulting from the pollination. (Strasburger, Osawa, Belling, etc.)

34. Pollination of *Mangifera indica.*—Fix in chrom-acetic-formalin and cut sections in paraffin of mango flowers at, and soon after, pollination. Wash in alcohol. Stain with iodine gentian-violet, or with alcoholic iron-hæmatoxylin, or with iron-brazilin. Use the varieties No. Eleven and Cambodia, which have adventitious embryos; and also some of the varieties which have only one embryo. Does the pollen tube reach the egg cell in the former? (Belling.)

35. Pollen Tubes of Semisterile Species Hybrid.—Cross the Georgia velvet bean, *Stizolobium* (*Mucuna*) *deeringianum*, with the Yokohama bean, *S. hassjoo.* (They can be raised to flower in a greenhouse.) From the resulting first-generation hybrids remove the ovaries at the proper time after pollination, cut them open at both ends, and put them in chrom-acetic-formalin, using the air pump if necessary. Omit washing. Cut in paraffin to longitudinal median sections. Wash in 70 per cent alcohol. Stain with brazilin, iron-hæmatoxylin in 70 per cent alcohol, or iodine gentian-violet. Half the embryo sacs cease developing early. Note that no pollen tubes pass to ovules having such aborted embryo sacs. (Belling.)

36. Antheridia of Chara.—Dissect out antheridial filaments of Chara or Nitella, and mount them in iron-acetocarmine. Open other antheridia, and fix in chrom-acetic-formalin, wash in chrom-acetic, run through the alcohols to 70 per cent, and stain with iron-brazilin. Dissect out the stained filaments in immersion oil. Study sequence of stages in the cell divisions (Karling).

37. Antheridia of Fucus.—Mount the division stages in iron-acetocarmine, with subsequent squeezing out. Try if smears can be well fixed in chrom-acetic-formalin, and stained with iron-brazilin. (This object has been used as a test for good fixation by Chamberlain.)

38. Origin of Epidermis, etc.—Cut median sections in paraffin of soft stem apices. Use chrom-acetic-formalin and iodine gentian-violet, or iron-hæmatoxylin in 70 per cent alcohol. Try especially Pelargonium, Zea, Solanum, Lycopersicum, Mirabilis, and Delphinium. Trace the origin of the leaves from the different cell layers.

39. Formation of Tissues from Cambium.—Stem of woody dicotyledon in the early summer. Fix small segments, freed from superfluous wood and cortex in chrom-acetic-formalin. Cut in alcohol-glycerin with the sliding microtome. Stain with Mayer's hæmalum and methyl green, and mount in xylol balsam or in immersion oil. The origin of vessels, wood fibers, sieve tubes, bast fibers, etc. is traceable. Tangential sections show most.

40. Study of Starches.—(*a*) Mount in water or agar, and examine with water-immersion objective. (*b*) Mount in immersion oil, and examine by polarized light. Put a large tourmalin or a polarizing calcspar prism near enough to the diaphragm before the source of light not to cut down the aperture of the condenser. Put a small tourmalin over the eyelens. If the tourmalins have plane-parallel sides, the corrections of the microscope are not injured, and the highest oil-immersion objectives may be used. The tourmalins should be 3 millimeters thick (Beck). The monocular microscope with a silvered prism is best to use, because of polarization by reflection.

41. Examination of Vessels and Fibers.—Soak thick, longitudinal slices of material, cut with a knife or plane, in a cold mixture of nitric acid and the chlorate of an alkali. When the material is sufficiently loosened, wash and put it in ammonia solution to complete the process. Wash again, and mount in clear agar; or dehydrate, stain with methyl green, and mount in balsam.

42. Origin of Cell Layers in Embryo.—Open pollinated ovaries of flowers at different stages, and fix ovules in chrom-acetic-formalin. Omit washing in water. Cut longitudinal sections in paraffin. Wash in alcohol. Stain with Mayer's hæmalum, iron-hæmatoxylin in 70 per cent alcohol, or iodine gentian-violet. Try Datura, Nicotiana, and Oenothera. Note origin of cell layers in embryo.

43. Embryos of Fucus.—Put in a hollow slide with sea water some of the green egg cells and some of the yellow sperm cells. Observe without a cover, with the 10 objective, the attraction of the sperm. Put slide in a moist chamber, and embryo plants will form on the glass. Also observe ova and sperm under a cover-glass with a water-immersion objective. Try hybridizing different species of Fucus.

44. Fertilization of Ferns.—Grow fern spores on moist tile, under a glass cover, in a saucer with dilute culture solution. Put cut segments of prothallia with archegonia, and of others with antheridia, on a slide with water. Cover, and observe with water-immersion objective. Note entry of sperm into canal. Try to observe hybridization of different species of fern.

45. Bacteria and Spirochætes.—Obtain material from unbrushed teeth, or from a case of Vincent's angina, or from decaying legumes in water occasionally changed. Observe alive, in thin layer, with special dark-field condenser (cardioid or bicentric), and special oil-immersion objective of about 1.0 aperture. Covers should be 0.17 millimeter thick. Or use corrected water-immersion condenser of about 1.3 aperture, with central stop just large enough for an oil-immersion objective of about 0.85 aperture. Or

use a central stop just large enough for the 20 apochromatic objective of 0.65 aperture. For all these, the best radiant is probably the ribbon of a tungsten ribbon-filament, 6-volt, 108-watt lamp, focused directly on the object, and moderated by yellow-green or blue-green screens. Observe the bacteria dividing transversely, and the spirochætes dividing longitudinally.

46. Same Object.—Observe with yellow-green or blue-green light, corrected water-immersion condenser, cover-glass just 0.17 millimeter thick, diaphragm on source smaller than source-field, and water-immersion objective (70 apochromatic, or 90 achromatic).

47. Same Object.—Smear uniformly on slide with end of other slide held obliquely, with the liquid in the acute angle, and this angle preceding the obtuse angle. Allow to nearly dry. Fix slides in Flemming's solution, or in chrom-acetic-formalin. Stain with gentian-violet and iodine, or with iron-hæmatoxylin in 70 per cent alcohol. Mount in immersion oil with standard cover-glass; or examine without a cover, lengthening the microscope tube in the latter case (by about 15 millimeters for a 90 objective). Use an apochromatic objective of 1.3 or 1.4 aperture with Wratten screen No. 56; or a fluorite objective of 1.3 aperture with Wratten screen No. 58.

48. Same Object.—Smear on cover-glass 0.17 millimeter thick, and fix and stain as in **47**, taking care that the background is clear. The finest rods, cocci, and spirochætes will then be lightly stained. Wash well in xylol, and dry over fused calcium chloride. Mount in air, with melted paraffin round the edges. Observe with apochromatic oil-immersion objectives of 1.3 and 1.4 aperture, with maximum condenser cone of 1.0. Since the objects are in optical contact with the cover-glass, the working apertures will be 1.15 and 1.2, respectively. Minute bacteria and flagella are clear.

49. Same Object.—Stain lightly with fuchsin, after preparation as in **47**. Use slide of the right thickness to suit the condenser, and cover-glass 0.17 millimeter thick.

Mount in immersion oil. Use dark field from Nelson's Cassegrain, or Zeiss's Leuchtbild condenser, oil immersed, with ribbon-tungsten filament focused on the object. Use fluorite or apochromatic objective of 1.3 aperture. The organisms show the complementary color to the stain.

50. Same Object.—Stain well with fuchsin, after fixing as in **47**. Wash and dry the preparation. Use a corrected and adjusted aplanatic achromatic condenser (with central-spot diaphragm cutting out about 0.7 aperture), water immersed. Employ apochromatic objective 20, and monocular microscope, with tube length increased by about 35 millimeters to compensate for the absence of a cover-glass. Or the binocular may be used, if a dry cover-glass 0.17 millimeter thick is put on. (Coles.)

51. Same Object.—Get some liquid India ink which contains no bacteria or spirochætes. Test this by making a smear. Mix some of the material with a drop of this India ink, and make a smear as described in **47**, on a well-cleaned slide. When dry, mount in immersion oil, under a cover-glass 0.17 millimeter thick. Examine with the highest objectives.

52. Same Object.—As in **51**, but use strong filtered solution of nigrosin instead of India ink. The slide should be cleaned first by rubbing it with dry soap, and polishing this off with dry filter or towelling paper. (Coles.)

53. Streptococcus in Chains from a Culture.—Preparation as in **47**, but stain feebly with fuchsin. Mount in immersion oil, under cover 0.17 millimeter thick, and view with Cassegrain or Leuchtbild condenser, and fluorite or apochromatic objective of 1.3 aperture.

54. Staphylococcus from a Culture.—As in **53**.

55. *Surirella gemma.*—In low refractive medium. Obtain washed material of this diatom. Spread on cover 0.17 millimeter thick, and mount in agar jelly (with an antiseptic). Seal with paraffin. Examine markings (lines of dots) with water-immersion and oil-immersion objectives.

56. Same Object.—Mount in air, under cover 0.16–0.17 millimeter thick. Examples are spread on a cover-glass,

which has been previously covered with a thin layer of hyrax dissolved in xylol, and dried. The cover is then heated sufficiently to melt the hyrax. Good examples show the dots black.

57. Same Object.—Spread material on a cover-glass 0.16 millimeter thick, in water, and dry by heat. Put a drop of hyrax on a slide, and concentrate by heat. When thick, invert the slide over the cover, and apply pressure. The dots show well, with optimum adjustment, and about 1.0 condenser aperture. This may be used as a test object for the highest powers.

58. Dots of Amphipleura.—Mount material containing *Amphipleura pellucida* as in **57**. The visibility of the transverse lines may be used as a test for the adjustments of the condenser and objectives, with a $\frac{4}{5}$ to $\frac{9}{10}$ cone. Use blue-green light, with apochromatic objectives. Put tourmalin before source, and rotate to proper position for best vision.

59. Nuclei of Yeasts.—Spread actively growing yeast over a slide, as in a bacterial smear. Let it nearly dry in the air, and then invert the slide in chrom-acetic-formalin. Stain with iron-brazilin, and mount in immersion oil. Observe nuclear division.

60. Circulation of Cytoplasm.—Staminal hairs of Tradescantia, Zebrina, or Rhoeo, mounted in water. Cover-glass 0.17 millimeter thick. Viewed with the 70 apochromatic water-immersion objective. Also to be viewed through apochromatic objective 60, of 1.05 aperture, with the cardioid condenser, and a tungsten-ribbon filament focused on the object in green light.

ANIMAL OBJECTS

61. Grasshopper Chromosomes.—Obtain males of Chortophaga, Phrynotettix, etc., at the right stage. Kill by crushing thorax. Slit open abdomen, using no water, and smear tubules of testis with a scalpel over large cover-glass 0.17 millimeter thick. Put the cover quickly on a drop of iron-acetocarmine. Seal with melted paraffin. After a

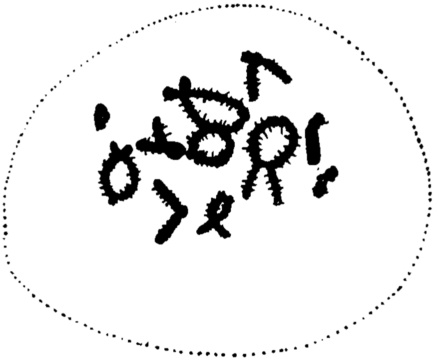

FIG. 26.—First spermatocyte of grasshopper, *Chortophaga* sp. Iron-aceto-carmine preparation. This cell was over 10 microns below the cover, and hence gave a foggy image with an oil-immersion objective of 1.4 aperture. Drawn with a dry fluorite 4.3-millimeter objective of 0.85 aperture with a 15 compensating eyepiece, the tube length being increased to 200 millimeters. Objective corrected for a cover-glass 0.18 millimeter thick. Cover-glass, 0.135 millimeter. Camera drawing.

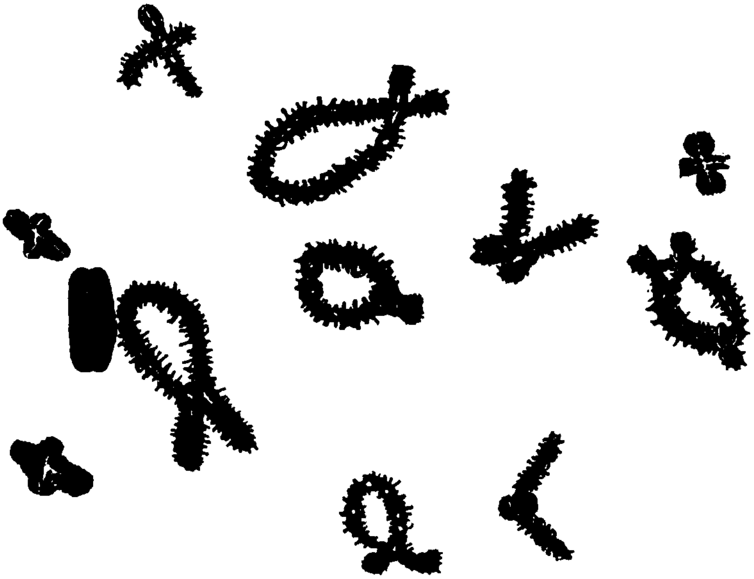

FIG. 27.—Same cell as in Fig. 26, but turned over and pressed out on the cover-glass. Viewed with apochromatic objective 90 of 1.4 aperture, with a 15 eye-piece. Tube length increased to 173 millimeters. The 11 bivalents and the univalent sex chromosome are shown. Chiasmas are distinguishable at some nodes. Camera drawing.

day or two, press out selected cells. Examine with a water- or oil-immersion objective, using Wratten yellow-green screens. Also try smears fixed in chrom-acetic formalin, and stained with a suitable nuclear stain. Also try Apotettix, which has a quite different diaphase and metaphase. (Wenrich, Janssens, Harman.) (See Figs. 26, 27, and 28.)

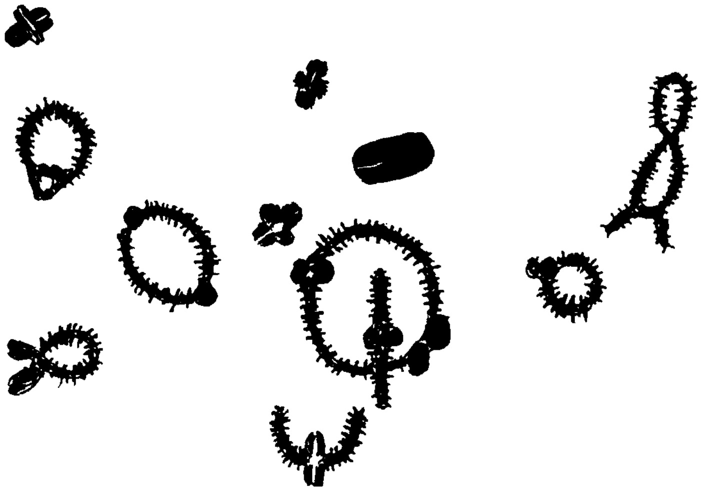

FIG. 28.—Another first spermatocyte from the same slide of *Chortophaga*, as in Figs. 26 and 27. Viewed with a Leitz achromatic 1.8 millimeter objective, compensating eyepiece 10, and Wratten yellow-green screen, No. 58. Without the screen, the definition is not so sharp. Tube length 180 millimeters. Camera drawing.

62. Unequal Homologues.—Examine, as in **61**, Orthoptera with unequal homologues in one or more pairs, or with constrictions in a pair of homologues in different positions (as in Circotettix). Observe these at diaphase; and note that the separation of the pachytene thread into loops, at the internodes at which these inequalities of length or differences of position occur, is between homologues, not between sister strands. (Robertson, Wenrich, Carothers.)

63. Chromosomes of Mus.—Put small pieces of the living seminiferous tubules (about 1 millimeter across) into a small tube of iron-acetocarmine. After a day or two, press them out under a large cover-glass. Examine with water-immersion objective of 1.25 aperture. Also fix smears

with chrom-acetic-formalin, and stain with iodine gentian-violet, or iron-hæmatoxylin in 70 per cent alcohol. Mount in immersion oil.

64. Chromosomes of Tumors.—Treated as in **63**. Chromosomes counted in late prophase (Belling, 1927).

65. Chromosomes of Drosophila.—Use XXY females. Ovary dissected out. Fixed in strong Flemming's solution, or in chrom-acetic-formalin. Washed in alcohol (not water). Cut in paraffin. Stained with nuclear stain which does not require long maceration in water. Iron hæmatoxylin, with all reagents in 70 per cent alcohol, can be used. Dividing oögonial cells show the required figures.

66. Chromosomes of Drosophila. $2n$ + IV Animal.—As in **65** (Bridges).

67. Chromosomes of Drosophila. $2n$ − IV Animal.—As in **65** (Bridges).

68. Chromosomes of Drosophila. Female with Attached X's.—As in **65** (L. V. Morgan).

69. Chromosomes of Drosophila. Triploid Female.—As in **65** (Bridges).

70. Chromosomes of Amphibian.—As in **63** (Janssens).

71. Chromosomes of Ova of Ascaris.—Fix smears in Carnoy's mixture. Try iron-acetocarmine as subsequent stain.

72. Maturation Divisions in the Ova of Dendrocoelum.—Try as in **63** or **71**. Count the chromomeres in good preparations of the pachytene. (Gelei.)

73. Maturation Divisions in Sperm Formation in Tomopteris.—Try as in **61**. Try alcoholic iron-hæmatoxylin or iron-brazilin on smears fixed in chrom-acetic-formalin. (Schreiner.)

74. Salivary Cells of Larvæ of Chironomus, or Other Flies.—Try preparation as in **63** or **73**. Count the chromomeres. (Alverdes.)

75. Cleavage in Ova of Fresh-water Snail (Planorbis). Living.—Water-immersion objective, 70 apochromatic. Ova of Echinus are also favorable.

76. Cleavage of the Ova of Hookworm.—The eggs of hookworms can be separated by washing and decantation from the fæces of infested cattle. They are transparent and show cleavage well. Water-immersion objective.

77. Embryo Chick. Alive.—Cut from the egg at intervals during the first 50 hours of incubation. Use cover-glass and dry objective, such as 10 or 20 apochromatic, on the preparation in normal salt solution on a warm stage.

78. Human Blood (or **Frog's or Salamander's Blood, Drawn from the Heart with a Pipette**). **Fresh.**—Cover sealed with melted paraffin. Apochromatic water-immersion objective 70.

79. Same Object.—Viewed with cardioid or bicentric condenser, and special oil-immersion objective 60, of 1.0 aperture.

80. Same Object.—Smear. Dried. Fixed by heat. Stained with eosin and methylene blue. Viewed by oil-immersion objective without cover-glass, the tube length being increased a few millimeters (about 15 millimeters for a 90 objective).

81. Same Object.—Smear. Fixed by heat. Stained by Giemsa's method. Viewed dry in dark field of achromatic immersion condenser, by 20 apochromatic objective, the tube length being increased 35 millimeters as in **50** (or a 0.17 mm. cover being put on). (Coles.)

82. Same Object.—Thick smear. Nearly dry, and fix with chrom-acetic-formalin. Stain with iodine gentian-violet, or alcoholic iron-hæmatoxylin, or with iron-brazilin.

83. Same Object.—Thick smear treated with iron-acetocarmine. Cover 0.17 millimeter thick. Shows nuclei. High-power water-immersion objective.

84. Same Object.—Nigrosin smear, as in **52.**

85. Blood with Malarial Parasites.—Viewed after treatment as in **80.**

86. Blood with Trypanosomes.—As in **81** and **84.**

87. Blood with Filaria.—As in **78** and **82.**

88. Cells from Mouth Showing Brownian Movement.—Use water-immersion objective 70, or oil immersion 60 of 1.05 aperture and dark-field condenser. Cover 0.16 to 0.17 millimeter thick.

89. Living Muscle Fiber.—From leg of bee or beetle. Mount in fluid from thorax. Water-immersion objective 70. Also in polarized light with tourmalin before source and over eyepiece. Also dark field.

90. Structure of Drosophila.—Male and female mounted in immersion oil, after absolute alcohol, cedar oil, and xylol. Also the hard parts alone, mounted in immersion oil after treatment with caustic soda, water, alcohol, cedar oil, and xylol.

91. Mutants of Drosophila.—Some of the chief mutants showing structural differences, mounted as in **90.**

92. Amœba.—In large numbers in cultures. Treat as in **78** to **84.**

93. Vorticella.—Division. Water-immersion objective 70. Also dark field by central stop on immersion condenser, and apochromatic objective 20, with cover-glass 0.17 millimeter thick.

94. Paramœcium.—From culture. As in **93.** Also nigrosin smear.

95. Ontogeny of Sponge.—Grantia, living. As in **93.**

96. Foraminifera, Living.—On the thin side of a glass trough of sea water, showing cytoplasmic net. Greenough, horizontal.

97. Larva of Sea Urchin and of Starfish.—Living; and also fixed, and stained with Mayer's carmalum.

98. Circulation in Frog's Lung or Mesentery, or in Larval Teleost.—Use apochromatic objective 20, corrected for uncovered objects by extending tube about 35 millimeters (or put on cover, 0.17 millimeter thick).

99. Living Cells, in Hanging Drop, from Tissue Cultures. Embryo chick. Water-immersion objective 70.

100. Phagocytosis.—Smear showing gonococci or meningococci in leucocytes. Fixed and stained.

CHAPTER XXVI

FIXING AND STAINING MICROSCOPIC OBJECTS

Ends in View.—Biological objects may be fixed, sectioned, and stained either (*a*) to show structures built of cells, as in morphological and embryological studies, or (*b*) to show fine details of nuclear or cytoplasmic structures. The methods for the first have been well worked out, and are given in excellent manuals, such as Bolles Lee's *Vade-mecum.* Here we shall only deal with certain methods for ultimate fixing and staining of details of nuclear structures, mainly in plant cells.

Paraffin Sections.—In making paraffin sections of anthers, the best method for details of plant chromosomes seems to be to soak the anthers for three minutes in Carnoy's alcohol-acetic-chloroform, before putting them in another fixing solution, such as chrom-acetic-formalin (Maeda). They may then be passed through graded alcohols, without previously washing in water; imbedded, sectioned, and washed well in 70 per cent alcohol, before staining with hæmatoxylin or brazilin in 70 per cent alcohol, being mordanted and differentiated by iron-alum in 70 per cent alcohol; there being no soaking in water or watery solutions.

In ordinary paraffin sections of anthers of Aloë or Lilium, the fixing will have occurred too slowly to show the chromomeres distinctly, or at all. It is well known that, even in sections of root tips, only the outer cells may show optimum fixation, it being sometimes hours before the inner cells are fixed. Since the anther has, in many plants, a less penetrable outer wall than the rootlet, the fixation of the pollen mother cells is slow; so that there is time for inter-mortem and post-mortem changes.

With rapid fixing, the chromomeres are visible in the leptotene, zygotene, and pachytene threads of Lilium, to

the number of over 2,000 in all. Figures showing smooth threads in Lilium, between leptotene stage and diplotene, are taken from too slowly fixed preparations, or from cells touched by anther sap. Also, the pachytene thread in Lilium is not coarsely double except at the brief diplotene stage; and the beaded threads are perfect, "flakes" or "knots" being results of slow fixing. In fixing large anthers, such as those of Lilium, it may be best to split them lengthwise between the two pairs of loculi, before putting them in alcohol-acetic-chloroform.

The writer agrees with Bolles Lee, with regard to the superiority of thin cedar oil as a clearing agent.

Iron-acetocarmine Temporary Preparations.—With certain precautions, acetocarmine may give rapid fixations. Large anthers should be split lengthwise, and cut across. These cut anthers, after drying with blotting paper, should be put in a drop of iron-acetocarmine, which after two minutes or so is removed with blotting paper, and a new drop added. The pollen mother cells should be pressed out, either by a scalpel, a spear-headed needle, a glass slide, or by slight pressure or tapping on a cover-glass. The anther walls are then removed with a needle, and a cover-glass put on; excess liquid being drawn off with blotting paper. The preparations are sealed as soon as possible with melted paraffin, applied with a piece of hot metal. They are left for some days or weeks to stain fully. Then they are to be examined, preferably with a water-immersion objective. (Slides sometimes keep for months, in the dark.) Any selected cell may be squeezed out at this stage, when the cytoplasm is plastic; and usually cytoplasm and chromosomes can be freed from the cell as a whole, and flattened. Before this, the cytoplasm may be too liquid, and after some weeks it may be too brittle, to squeeze out. Such flattened groups of chromosomes, adhering to the cover-glass, are well suited for examination with oil-immersion objectives, and for photography. The chromomeres can be seen and counted in rapidly fixed preparations of the pollen mother cells of Lilium and many allied genera, at the pachy-

tene stage. The corrugation of the chromosomes of Lilium at metaphase and first anaphase can be well seen with such rapid fixation. Careful observation will show that the zigzags do not form a regular spiral. The chiasmas at diaphase and metaphase are also visible in well-fixed cells after squeezing flat.

Iron-acetocarmine is prepared by mixing 45 volumes of glacial acetic acid with 55 volumes of distilled water, heating to boiling, and adding (about 1 gram to each 200 cubic centimeters, of) good carmine powder. The mixture is to be cooled on ice, and decanted; and a drop or two of solution of ferric salt (preferably the acetate) added to every 100 cubic centimeters until the color on standing is dark wine red. Too much iron precipitates the carmine. The solution should be kept in a stoppered bottle. Slides should be stored in the dark, in a cool place. They keep best on ice.

Iron-acetocarmine gives rapid fixation only if the pollen mother cells are isolated in fresh undiluted solution, unmixed with juice from anther walls or connective. Hence the first washing in acetocarmine should not be omitted. Also, as few anthers, or as small a piece of anther, as can well be used, should be put on one slide. The presence of the juice of the anther wall and connective, and the lack of separation of masses of pollen mother cells, are hindrances to rapid fixation. Large pollen mother cells, like those of Canna or Lilium, are slower to fix than the smaller cells of Nicotiana or Datura. In fact, much care is needed to get good or even passable preparations of Lilium pollen mother cells in iron-acetocarmine.

Iron-acetocarmine easily gives good preparations with the chromosomes of some Orthoptera, and of some mammals.

Smear Preparations Stained with Brazilin.—The writer has spent some time investigating the best method of making smear preparations of pollen mother cells. The following method gives quick fixation and sharp staining, if carefully adhered to in detail.

Test an anther of each bud by squeezing it out in a drop of iron-acetocarmine, covering, and examining. Clean and polish a slide and put anthers or cut anthers from tested buds in a line across the slide an inch from one end. Large anthers, like those of Lilium, should be split lengthwise, and dried in blotting paper, after cutting them across. Too much material should not be used. (If the liquid from the sap-filled cells of the anther walls, and of the connective between the anther loculi, gets into contact with any pollen mother cells before the fixative, such cells are instantly spoiled.) Another clean slide is then held crosswise, and with one rapid slanting or curving sweep, the anthers are pressed out, leaving trails of pollen mother cells across the blank center of the lower slide. This slide (or the other slide, too, if necessary) is then without any delay, inverted in the fixative. The fixative is put in a flat, covered dish, with two thick blank microscope slides placed to support the ends of the inverted slides. The writer uses circular dishes holding three slides, which are well covered by 50 cubic centimeters of fixative. The following fixative (resembling one used by S. Nawaschin) has proved satisfactory for demonstrating chromomeres.

Solution A

Chromic acid crystals	5 grams
Glacial acetic acid	50 cubic centimeters
Distilled water	320 cubic centimeters

Solution B

Commercial formalin	200 cubic centimeters
Distilled water	175 cubic centimeters

(For metaphase preparations, solution B may be made of 100 cubic centimeters of formalin, and 275 cubic centimeters of water.)

To prepare the fixative, 25 cubic centimeters of solution A are mixed with 25 cubic centimeters of solution B, and used at once; 3 hours seems sufficient for fixing, but 12 hours in the fixative does little apparent injury. Slides are transferred from the fixing reagent to a dish containing about 30 cubic centimeters of solution A. Here

they stay about 10 minutes, and anther fragments are then removed. A long stay is injurious. These slides are then run through 15, 30, and 50 per cent alcohols (about 5 minutes in each), up to 70 per cent. Here they are left over night. They are then put for 24 hours in a 1 per cent solution of ferric ammonia alum in 70 per cent alcohol. Follows a brief washing in 70 per cent alcohol, and a soaking of 15 minutes to 3 hours in 70 per cent alcohol. The shorter the time, the more deeply the metaphase and cytoplasm stain. Then comes 2 to 24 hours staining in a solution of 0.5 gram of brazilin in 100 cubic centimeters of 70 per cent alcohol.[1] Then the smears are washed briefly in 70 per cent alcohol, and differentiated in a 1 per cent solution of iron alum in 70 per cent alcohol, for from 1 minute to 3 hours or more. The pachytene stage and the chromomeres usually require only slight differentiation with iron alum, as 2 or 3 hours of staining usually suffices for them. But when metaphases have been stained for a longer time, a differentiation of one or more hours is sometimes required, especially with small chromosomes such as those of Datura, Matthiola, or Nicotiana.

After differentiation is seen to be satisfactory, by the microscope, upon examining the preparations under cover-glasses, the slides are washed in 70 per cent alcohol, and transferred to 95 per cent alcohol, where they may be left without injury for some hours. They are then passed through (*a*) absolute alcohol, (*b*) a mixture of equal volumes of absolute alcohol and thin cedar oil, and (*c*) a mixture of equal volumes of xylol and thin cedar oil; and finally washed with xylol. They are mounted by draining off the xylol, applying a drop or two of immersion cedar oil, and covering with a measured cover-glass. Such preparations show rapid fixation, except where sap from the anther wall or connective has reached the pollen mother cells. The brazilin stain, at its best, shows chromomeres, or metaphase chromosomes, brown to black, and cytoplasm

[1] When using freshly made solution of brazilin, it is well to add one or two drops of 1 per cent solution of iron alum to each 50 cubic centimeters.

pink or colorless. Cell walls are unstained. The staining effect is sharpened by the use of green Wratten filters, especially No. 57A (on the monocular); or the blue-green filter, No. 64; or a combination of No. 56 and No. 64.

If hæmatoxylin is dissolved in 70 per cent alcohol (0.5 gram to 100 cubic centimeters), the same procedure can be used as for brazilin. A longer differentiation is always needed, however, and the cytoplasm is usually not so clear. The writer prefers brazilin, especially for the study of chromomeres. Iron-brazilin does not seem to give such good results with some animal tissues, though smears of the blood corpuscles of a salamander have been well stained with it.

Other Methods.—Other special methods of fixing and staining to show nuclear details are given in the papers written by cytologists, both for plant and animal tissues. The two described here are those which have sufficed for the writer in chromosome work.

CHAPTER XXVII[1]

FIFTY PRACTICAL EXERCISES WITH THE MICROSCOPE

1. Test of the Ground Glass.—Test the ground glass for the passage of other than diffracted (or refracted) light by trying to form an image, on a screen before the microscope, of the incandescent filament; having before the screen a large condensing lens between once and twice its focal length from the lamp. It is best to form the image first, and then insert the ground glass. Only rays passing through minute unground portions of the glass would help to form such an image.

2. Glare and Large Source of Light.—Take a 40 objective of 0.85 aperture, or the 70 water-immersion objective of 1.25 aperture (with correction collar). Focus the objective on a well-known object with fine but sharply stained details, such as delicate bacteria or spirochætes, or fine chromosome threads with chromomeres at the leptotene stage. Use a cover-glass 0.16 to 0.17 millimeter thick; or adjust the objective for cover-glass thickness by altering either the tube length or the correction collar. With a fully corrected immersion condenser, get a $\frac{3}{4}$ cone with a large source of light, such as a 5-centimeter ground-glass disc at 25 centimeters distance. Note the glare obliterating details on attempting to increase the aperture of the condenser light circle to seven-eighths or nine-tenths of that of the objective. Put a 5- or a 3-millimeter diaphragm close to the ground glass, and focus it. Note that the glåre disappears, and that the aperture can now be increased to $\frac{7}{8}$ or $\frac{9}{10}$. (The intensity of the light must be properly adjusted by screens.) Try the same with an oil-immersion objective. (Beck, Nelson, Hartridge.)

[1] Some few of these exercises have not been tested by the writer. They are then of the nature of suggested experiments.

3. Total Reflection Prism.—Replace the plane mirror of the microscope by an unsilvered right-angled reflecting prism, with equal transmission faces, about 25 or 30 millimeters square. Slant the microscope about 45 degrees, and note with the 10 objective that the image of a 3-millimeter diaphragm on the source of light is as bright as, or brighter than, that given by the plane mirror, and is single. Gradually raise the source of light, or set the microscope axis more upright, or both, until a point is reached where the reflection is much dulled. This marks the end of total reflection. Note that, to correct this, the source of light must be lowered, or the microscope more inclined. If the reflecting side of the prism were silvered, this loss of light would not occur. (Dallinger.)

4. Large Source of Light for Uncorrected Condenser.—Use an uncorrected condenser, dry or water immersed. Take a smear preparation, such as bacteria of the mouth stained with gentian-violet, for object. Use a 100 fluorite (or 90 apochromatic) oil-immersion objective of 1.3 aperture, and a slide and cover of standard thickness. Have a ground-glass disc, 2 or 3 inches across, close to the lamp, and 10 inches from the condenser. Use Wratten screen No. 66. Get the largest possible light circle on the back of the objective (and also, of course, at the eyepoint) by focusing the condenser. Change to the 3-millimeter diaphragm on the source of light. Note the reduced size of the condenser light circle on the back of the objective, the marginal ring, the loss of light, and the effect on the resolution and definition of the object. Try to get the largest solid cone by both enlarging the source and opening or closing the condenser iris.[1]

5. Marginal Rays for Fine Resolution.—Use an unadjusted achromatic condenser; such as one corrected for parallel rays (cloud light) used with a near lamp, or one corrected for oil-immersion used with water-immersion, or one corrected for a 1.3-millimeter slide used with a 1-millimeter slide. These condensers will show different

[1] *See Watson's Microscope Record*, No. 16, pp. 26–28.

degrees of undercorrection. (Somewhat similar, but more irregular results may be had with the ordinary uncorrected "Abbe" condenser, used oil or water immersed.) Have a 3-millimeter diaphragm as in **4,** with an oil-immersion objective of 1.3 aperture, and a fine well-stained object. Raise the condenser, with wide iris, above the usual focus for low apertures. Note the external bright ring on the back of the objective. This bright annulus has an aperture at the limit of the condenser, and enables the condenser to be used in resolving fine diatom markings, although it is undercorrected. Coarser markings, however, are not simultaneously well shown. Try this raised condenser on the 20 diatoms of the Moeller test plate, one by one. Also try, on the same objects, annular illumination by central stops before the condenser, cutting off different amounts of the aperture of the condenser. (Conrady, Spitta.)

6. Corrected Condenser and Small Light Source.—Take a corrected immersion condenser, corrected for centering, lamp distance, slide thickness, and immersion fluid; and focus the source on the object. Note (with a 1.4 or a 1.3 aperture objective and a well-stained object in balsam or immersion oil) on the back of the objective, the largest cone this condenser will give; using a 5-centimeter disc of ground glass close to the lamp as a source of light. Then put a 2- or 3-millimeter diaphragm close to the ground glass, and note the effect on the condenser light circle at the back of the objective, or in the eyepiece circle of the microscope over the eyelens. The better adjusted the condenser, the less shrinkage of this circle will be brought about by the 2- or 3-millimeter diaphragm. (Nelson, Beck, Hartridge.)

7. Focal Test for Under- or Overcorrection of Condenser.—Condensers corrected, in the old way, for plane waves and for oil immersion, are of course undercorrected when used with a near lamp, and either dry or water immersed. Take such a condenser; either a dry achromatic condenser of 1.0 nominal aperture, or an achromatic immersion condenser of 1.4 aperture when oil immersed.

The 2- or 3-millimeter diaphragm on the source of light is to be focused together with the object; first by the 10 objective of 0.3 aperture, then by the high dry objective of 0.85 aperture, and finally by an oil-immersion objective of 1.3 aperture; a slide of standard thickness and a standard cover being used, with a delicate well-stained object. In each case, employ the largest cone that can be obtained without glare. It will be found that the condenser has to be raised to focus the margin of the diaphragm as the change is made to an objective of higher aperture. This is, of course, because the outer zones of the condenser have a shorter focus than the central ones, since the condenser is undercorrected. For overcorrection, which is not so commonly met with, the reverse is the case. Only when the corrections are fairly complete do the zones focus together. (Nelson.)

8. Marginal Ring Test for Correction of Condenser.—Arrange condenser, etc., as in **7.** Use a 100 fluorite (or 90 apochromatic) objective of 1.3 aperture, and a 2- or 3-millimeter diaphragm on the source. Have an oil-immersion condenser, corrected for parallel rays. Use it as a water immersion, with a source of light 25 centimeters distant. On looking at the back of the objective, with both condenser and objective focused, and the iris opened fully, a marginal ring is visible besides the central disc, when the condenser is raised. This becomes more pronounced when the condenser is raised more, and disappears when it is lowered beneath the focus. (An overcorrected condenser shows such a marginal ring only when the condenser is lowered.) The writer regards this as the most practical test for the adjustment of the condenser. The correctly adjusted condenser shows no marginal ring, either on raising or lowering; and has maximum aperture with a small diaphragm. Poorly corrected well-adjusted condensers may show strong marginal rings both on raising and lowering, the central zone only being correct. (Nelson, Coles.)

9. Condenser and Different Slide Thicknesses.—Have a dry or water-immersion condenser, corrected or adjusted for standard lamp distance, and for a slide 1 millimeter thick. Observe the maximum aperture of the condenser light circle at the back of the objective (of 1.3 or 1.4 aperture), with a 3-millimeter diaphragm on the source of light, and a standard slide, 1 millimeter thick. Also the absence of a marginal ring on either raising or lowering the condenser. Shift to a slide about 0.8 millimeter thick, and note that the aperture of the refocused condenser is cut down, and that a marginal ring appears on raising the condenser, showing undercorrection. Try the same with a slide about 1.2 millimeters thick. Here the aperture is also lessened, but the marginal ring appears on lowering the condenser, showing overcorrection. (Coles.)

10. Condenser and Different Lamp Distances.—Use the same condenser and objective as in **9,** adjusted with the illuminated ground glass, used as the source of light, at 25 centimeters distance. Shift the source to 15 centimeters, and observe the diminution of the maximum condenser aperture after refocusing, and the appearance of a marginal ring on raising the condenser, showing undercorrection. If the source is changed to 40 centimeters, the effects of overcorrection are visible. (Nelson, Coles, Hartridge.)

11. Uncorrected Condenser with Condensing Lens.—With a large circle of illuminated doubly ground glass before a lamp of 100 or 150 watts, a large uncorrected condensing lens is arranged, by shifting its distance and the distance of the lamp, to throw an image of the illuminated ground glass just below the lower lens of the uncorrected condenser, large enough to fill the lens with light. The plane mirror is used. The condenser should be racked up near the limit. The aperture should be altered by the iris. Intensity should be decreased by appropriate screens. The aperture is to be tested by looking at the condenser light circle on the back of a high objective. Glare cannot well be avoided with high apertures, because of the lack of correction. (Koehler.)

12. Uncorrected Condenser with Ground Glass in Front Focal Level.—A piece of doubly ground glass (colorless or bluish) is put in the diaphragm carrier of the uncorrected condenser. A small 6-volt lamp is put close below, or a strong light is focused on the ground glass by a large condensing lens, using the plane mirror. The condenser is raised close to the slide. For water and oil-immersion objectives, the condenser may be immersed. Test the condenser light circle on the back of a high-power objective. Note that it can be cut down as usual by the iris of the condenser. However, the source is not cut down, and so there is glare at high apertures. (Hartridge, Zeiss.)

13. Dry Condenser Corrected by Unscrewing Top Lens.—In a dry achromatic condenser, the upper lens is usually a hemispherical single lens, while the two lower ones are cemented doublets. Hence, by slightly unscrewing the top lens, the combination can be corrected to suit a somewhat closer lamp or a thinner slide. Take an achromatic condenser corrected for a lamp at 25 centimeters and for a slide 1.3 millimeters thick. Unscrew the top lens sufficiently to correct it for slides 1.0 millimeter thick. Test the corrections, with a 3-millimeter diaphragm on the source, by the disappearance or thinning out of the marginal ring on the back of the objective on focusing the condenser either down or up. (Spitta, Coles.)

14. Correcting an Oil-immersion Condenser for Water Immersion.—Take an oil-immersion condenser of about 8.5 millimeters focal length, corrected for parallel rays and slides 1.2 millimeter thick. Substitute water for oil, with a slide 1.0 millimeter thick, and a lamp distance of about 25 centimeters. Cancel the resulting undercorrection by putting a supplementary achromatic lens, of about 15 centimeters focal length, and 30 millimeters across, close below the iris of the condenser (centered in the diaphragm carrier). Get the final adjustment by the ring test, altering the lamp distance till all is correct. (Hartridge, Coles.)

If the maker, however, has corrected the condenser for a lamp at 25 centimeters, a much weaker accessory lens is

needed, since it has only to correct for the undercorrection caused by the use of water instead of oil, and a thinner slide. Half of a rapid rectilinear photographic lens of the correct focal length and diameter may be sometimes used to advantage.

15. Aplanatic Aspheric Condenser and Green Light.—An aspheric condenser is well corrected for spherical aberration, but not corrected at all for color. It may, or may not, be corrected for plane waves. An aspheric condenser (made by Bausch and Lomb) has a focal length of 12 millimeters and requires a somewhat weaker accessory lens to correct it for lamp distance and water immersion than the achromatic condenser mentioned in **14.** Note that it has different foci for different colors; using the image of the diaphragm on the source of light, with an oil-immersion objective. Employ Wratten screens Nos. 66, 56, 57A, 58, and 61 in succession, and note the diminution of the range of color focus. With the denser screens, this condenser, when properly adjusted for lamp distance and water immersion, may be nearly equal to the achromatic condenser referred to in **14,** but without yellow-green screens it is inferior. This may be tested.

16. Dark Field with Immersion Achromatic Condenser.—Using a well-corrected and adjusted water-immersed achromatic and aplanatic condenser, with accessory correcting lens; center two star discs, accurately cut out of some thin metal or card, close under the lower lens or iris of the condenser. They may cut out condenser apertures of 0.75 and 0.95, respectively, for objectives with apertures of 0.65 and 0.85. Since their diameters are proportional to the apertures they cut off, the diameters can be calculated from the maximum useful diameter of the condenser lens or iris next them, and the known maximum aperture of the condenser. For a source of light, a 6-volt, 108-watt, tungsten-ribbon lamp may be employed. The ribbon is focused directly on the slide. The 20 apochromatic objective, with a high eyepiece, gives good images, the cover being 0.17 millimeter thick, or slightly less for objects in

water or balsam. The dry objective of 0.85 aperture (with correction collar), or the oil immersion of the same aperture, may also be tried. (Coles, Metz.)

17. Dark Field with Cardioid or Bicentric Condenser.—The cover-glass and slide should be especially cleaned. The slide should be 1 millimeter thick, and the cover 0.17 millimeter thick. Put an appropriate centered bright-field condenser in the condenser sleeve. Focus the source of light on the slide, and center this source with a 10-times objective which is concentric with the oil-immersion objective. Exchange the bright-field condenser for the cardioid, without shifting the lamp or the mirror. Put water (or immersion oil, or xylol) between the condenser and the slide, which should show a sufficient number of refractive particles. A special slide may be used for centering, having a piece of wet lens paper under the cover-glass. Center the cardioid condenser by moving the lever and the rotating ring in the proper directions, one at a time. Replace the slide with lens paper by the slide with bacteria, etc., for dark-field observation with the special oil-immersion objective. The intense light of the direct image of the incandescent filament or ribbon must be shielded by a dense screen during focusing and centering by the bright-field condenser. Then this screen is removed. Slide and cover-glass must be parallel, and the lack of this causes failure. The layer of liquid should be as thin as practicable. A special dark-field chamber with an island within a groove is useful. The preparation may be temporarily sealed with soft paraffin. (Jentzsch, Zeiss, Leitz.)

18. Dark Field with Cassegrain or Leuchtbild Condenser. Take a thin enough slide, with specimens of bacteria or spirochætes slightly stained with fuchsin, and mounted in immersion oil or balsam, with cover 0.17 millimeter thick, or without a cover-glass. Use a powerful light, such as a 6-volt, 100-watt tungsten lamp, coiled filament or ribbon. Center the light, and focus the preparation with the usual bright-field condenser, using a dense enough screen. Remove this condenser without shifting the mirror,

and substitute the Cassegrain in a centering collar, or the Leuchtbild condenser with its centering arrangement. Remove the screens from the source of light. Put immersion oil on the condenser. Center these condensers by the already centered image of the source, putting a conspicuous part of the object in the field. The Cassegrain has an engraved ring which helps centering with low powers. Since each has a centering ring, when once centered they can be used again, the centering not being disturbed. For observation, the apochromatic objective 60 of 1.3 aperture with the 20 eyepiece forms a good combination. It should be corrected if necessary, for cover-glass deficiency from 0.17 millimeter, and requires about 5 millimeters increase in tube length for a cover-glass 0.10 millimeter thick. (Watson, Zeiss.)

19. Objects in Air, Water, and Immersion Oil.—Make three slides of stained bacteria, and three slides of *Surirella gemma*, under cover-glasses 0.17 millimeter thick, mounted on the slide, in air, water, and immersion oil, respectively. Observe all the slides with (*a*) a high dry objective, (*b*) a water-immersion objective (with collar), and (*c*) an oil-immersion objective, using a good condenser. Note the cutting down of the cone of the water-immersion and oil-immersion objectives on the objects in air; and of the oil-immersion objective of 1.4 aperture on the objects in water. Observe that the corrections of the dry objective are undisturbed on focusing up or down on objects in air, but not on objects in water or immersion oil; that the oil-immersion and water-immersion objectives show errors on objects in air a few microns below the cover; and that the oil-immersion objective is injured by having to focus through a few microns of water, and the water-immersion objective by having to focus through a few microns of immersion oil.

20. Effects of Reduction of Aperture in Oil-immersion Objective.—Take an oil-immersion objective fitted with an iris diaphragm, like the apochromatic 60, of 1.0 aperture, of Zeiss. Focus on a specimen of *Surirella gemma* in hyrax,

with the full aperture of the objective, and a condenser cone as large as possible without glare (perhaps four-fifths of the objective aperture), and note distinctness of the transverse lines, and faint visibility of the (network or) dots. Cut down the aperture of the objective by its iris to about 0.8 or 0.7, reducing the condenser cone correspondingly (so as to avoid glare). Note the lessened visibility of the transverse lines. Focus an oil-immersion objective 90, of 1.3 aperture on the object, using a $\frac{4}{5}$ condenser cone, and observe the (network or) dots. Reduce the condenser cone gradually, and note that the (network and) dots ultimately vanish. (Spitta.)

21. Centering the Condenser by the Condenser Light Circle on the Back of the Objective.—Fit tightly a round cardboard cap (like a pill-box lid) with a central perforation, on the top of the microscope tube, instead of an eyepiece. Using an oil-immersion objective focused on a well-stained object in immersion oil, with the condenser immersed by water under a slide 1.0 millimeter thick, notice whether the edges of the iris of the condenser (as seen on the back of the objective) are concentric, when opened sufficiently, with the edges of the back lens of the objective. If not, alter the centering of the condenser until the centers coincide. (If there is no centering sleeve to the condenser, but a sleeve that can be tightened by a screw, a piece of paper, of the right thickness, gummed on the right place on the side of the condenser, will usually set matters right.) (Coles.)

22. Aperture of the Condenser Cone.—With the microscope as in **21,** but having the eyepiece in place, center a corrected lens magnifying about 15 times (the lens part of a 15-times compensating eyepiece will suit) over the eyepoint, and observe the condenser light circle in the exit pupil. The aperture of the condenser cone may be estimated by the ratio of its diameter at the eyepoint to that of the outer dim circle, which is the image of the objective aperture circle. (This ratio may be measured directly on the back of the objective, by screwing a low objective into the

drawtube, and using a low eyepiece with movable micrometer scale.) (Beck.)

23. Use of Concave Corrected Lens as Amplifier.—Take a microscope fitted with a binocular attachment provided with an achromatic concave amplifying lens. Remove the binocular attachment, and focus the microscope as a monocular with a high-power objective, using the correct tube length (160 millimeters, usually). Gently remove the eyepiece tube, and screw the binocular attachment into place, without disturbing the focus. If everything is correct, the microscope should still be near focus. The amplifier thus allows an increase of tube length, from 160 to perhaps 230 millimeters, without altering the working distance of the objective, or causing under- or over-correction. (Siedentopf.)

24. The Star Test for Spherical Aberration.—Get a just opaque silver deposit by one of the well-known methods, on a slide 1.0 millimeter thick, and polish it with fine polishing powder until it shows minute holes. Leave one-third uncovered; put a cover-glass, 0.17 millimeter thick on another third with immersion oil between, and cover the last third with an immersed cover about 0.23 millimeter thick. Or clean a slide by rubbing it with dry soap and polishing off dry with towelling paper or filter paper. Smear a saturated solution of nigrosin on this slide with the edge of another slide. The film may be scratched by rubbing with a dry cloth, and divided into three parts and covered like the silver film. Focus a corrected condenser on the film of silver or nigrosin through the 0.17-millimeter cover, using yellow-green light for the latter. Cut down the condenser cone to nine-tenths or four-fifths of the aperture of the objective. Observe, with an oil-immersion objective, a minute hole in the film, giving a more or less circular spot of light. If everything is correct, the disc or ring into which the spot of light expands when out of the focus of the microscope will be equally sharp at equal distances within and without the focus, though it may not be equally bright. On observing the part of the slide

without a cover, the sharp ring is seen within the focus of the microscope, and beyond the focus is a vague mist. This shows undercorrection of the objective, and the tube should be lengthened to the right degree. With the cover-glass of 0.23 millimeter thickness, the sharp ring is beyond the focus of the microscope, and the misty spot within the focus. This overcorrection can be adjusted by shortening the tube sufficiently. (The Abbe test plate often shows some minute holes in the silver film, which may serve for the star test.) (Siedentopf, Coles.)

25. Adjusting Tube Length with Dry Objectives.—Take a monocular microscope with a drawtube and a corrected and well-adjusted condenser. Measure the tube length, from the rim of the drawtube (or fixed top tube) to the surface against which the shoulder of the objective fits. See if the graduation on the drawtube includes the revolving nosepiece, or does not include it, or includes a nosepiece of different thickness. Make the tube length 160 millimeters (for most objectives), or 170 millimeters (for the objectives of Leitz). Take a 20 apochromatic objective, giving best images with a cover-glass 0.17 millimeter thick. Use it with a 4/5 or 9/10 cone, and a 20 eyepiece. Put the standard cover-glass on a dry well-stained bacterial smear, and observe definition and resolution. Remove the cover-glass, and note that the drawtube requires to be lengthened by several centimeters (about 3½ centimeters) to get good definition again.

Take a 40 objective of 0.85 aperture corrected for a cover 0.17 millimeter thick. Test it on the above object with standard cover, with all adjustments correct and a 9/10 condenser cone. Change the cover-glass for one 0.15 millimeter thick. Note that the drawtube has to be pulled out about 20 millimeters to get good definition. (Nelson, Spitta, Coles.)

26. Measuring Cover-glasses for the Water-immersion Objective.—Take a No. 1 cover-glass below 0.17 millimeter thick. Run the screw gage (with a "feeler" milled head) down to see if the zero is correct. Allow for any slight

displacement of the zero, or wipe the plane faces and shift the regulating screws until the mark consistently comes at the zero point of the scale. Then measure the cover, say 0.15 millimeter. Use it to cover a thin object in immersion oil or balsam. Measure it again on the slide by focusing with a dry objective by the micrometer milled head of the microscope from particles on the lower surface of the cover to dust on the upper surface. The result will be about 50 if the divisions are 2 microns each (Zeiss) or 100 if the divisions on the scale are 1 micron each. Hence multiply by 3 in the former, and 1.5 in the latter case, and the cover thickness is given in microns. (An oil-immersion objective gives the cover thickness, or any measurement of depth in immersion oil, correctly without multiplication. Test this.) Set the correction collar of the water-immersion objective at the ascertained figure of cover thickness, and focus the objective. Shift the collar first one and then two grades each way, and see if the image is improved. Large covers sometimes differ 10 microns in thickness in different parts.

27. To Find the Proper Cover-glass Thickness to Use with a High Dry Objective.—Take an Abbe test plate, which has a long, narrow cover-glass, of thickness varying from under 0.10 to over 0.20 millimeter. On the under side, about four groups of parallel lines have been engraved in a silver film with a broad band of silver between each group. Take a dry 40 objective of 0.85 aperture, without a correcting collar. Use a $\frac{9}{10}$ cone from a well-corrected and well-adjusted condenser, and a 20 compensating eyepiece. Focus the edges of the silver lines, using a yellow-green screen, say, No. 56 of the Wratten gelatin light filters. Try which part of the long cover-glass gives the best definition of the broken edges and granular structure of the silver film at the center of the field. Note the corresponding thickness of the cover marked on the slide.

Look for some minute holes in the broader bands of silver, and try the star test with these. The rule is: diffraction mist when the object is *beyond* the focus of the

microscope (that is, when the microscope tube has to be raised from the focus to get the mist) means undercorrection and too thin cover-glass; while mist *within* the focus of the microscope (so that the microscope tube has to be lowered from the focus to get the mist) means overcorrection, and too thick cover-glass.

Take out one eyepiece of the binocular. With the Abbe test plate in focus, get the back lens of the 40 objective nearly quite filled with light. Put a card in from the front of the microscope just below the condenser so as to cover two-thirds or more of the diameter of the condenser cone as seen on the back of the objective. Then, without altering the focus, look through the other eyepiece at the thin bars of silver film at a point near the center of the field. If the cover is too thin, the upper edge of the line of silver film will be foggy and the lower edge sharp. If the cover is too thick, the upper edge will be sharp and the lower foggy. In the writer's experience, this test is not so delicate as the star test. (Siedentopf, Coles, Spitta.)

28. Use of Appropriate Immersion Oil.—Take an oil-immersion objective of 1.3 aperture, and see that the front lens is free from dry immersion oil. Focus it carefully, *without* using oil, on a fine well-stained object, under a standard cover-glass, with a corrected condenser and a fairly large cone. Observe the lack of definition. Now run distilled water between objective and cover, and observe, on refocusing, the improvement in definition; which is, however, still imperfect. Dry the slide and objective with blotting paper and put ordinary thick paraffin oil between them. Note that the definition is better, but still quite bad. Finally, clean off with xylol, and use the proper thickened immersion cedar oil, and note the improvement. Observe that larger condenser cones can be used with the correct immersion fluid.

29. Use of Correction Collar.—Take a dry or water-immersion objective with a correction collar. Measure the cover-glass on an object, approximately, with the screw cover-glass gage; by measuring first the slide, and then the

slide plus cover. Or measure the cover by focusing from the under to the upper surface with a dry objective, and multiplying the reading of the micrometer milled head in microns by 1½. Set the correction collar at this point. Use the largest possible cone which can be employed without glare. Try, on a fine, well-stained part of the object, the effect of shifting the collar one or more grades each way. Finally, get the collar correct to half a grade. Try to demonstrate that the objective gives the optimum image with a cover-glass of 0.17 millimeter, notwithstanding the setting of the collar at the right points for the different thicknesses.

30. Different Cover-glass Thicknesses with Oil-immersion Objectives.—Take an oil-immersion objective 60, of 1.3 aperture. Make an India-ink, silver, or nigrosin film, covered with immersion oil under covers of 0.17, 0.10, and 0.0 millimeter thickness. Using the star test, find the best tube length for these three thicknesses of cover. Do the same with an oil-immersion objective 90, of 1.3 aperture. The 60 objective will probably require about 1 centimeter, and the 90 objective about 1½ centimeters of increase of tube length for uncovered objects. (Coles.)

31. Resolution of Diatoms.—It is not only the fineness of the markings which prevents the easy resolution of diatoms; but it is often lack of sufficient contrast in the markings, also. For the most difficult of diatoms are resolved more readily when mounted in realgar, so as to give the maximum of contrast. Hence, to resolve the markings fairly readily, mount the diatom in hyrax, not in balsam or immersion oil, and use strong almost monochromatic green illumination, by focusing a direct tungsten ribbon, through several superposed green screens, like Nos. 58, 61, or 64, of the Wratten series, the immersion condenser being well corrected so as to give the largest available cone. A central stop to the condenser makes the markings sharper. Its size can be calculated, according to Metzner (98*b*) as twice the calculated full cone of aperture necessary to resolve the object, minus the aperture of the objective

used. This may be tried with various diatoms. Fine test objects may also be tried with a tourmalin (or Nicol prism) before the small source of light; or, instead, with a tourmalin over the eyepiece. The tourmalin, or Nicol prism, should be rotated until it is in the right azimuth with regard to the particular set of lines in question. This is because light strongly diffracted by a line is polarized in one direction, and the tourmalin cuts out more or less of the other light. (Stump, 129.)

For the use of a narrow beam of oblique light see Spitta (127). This method is not recommended, since the images are only partial.

In the writer's experience, oil-immersion objectives of 1.3 aperture which allow of a nine-tenths cone on the dots of a fine specimen of *Surirella gemma* in hyrax, and at the same time permit a fairly sharp enlargement of 1,800 times, also give brilliant images of all objects at the maximum useful magnification of 1,250. (The writer found only two such objectives of optimum quality out of six high-power apochromatic and fluorite objectives he used in his work.)

32. Diaphragm in Drawtube.—With a large source of light, an oil-immersion objective and a $^9/_{10}$ cone, on a well-stained object with the monocular microscope, try the effect of a 14-millimeter diaphragm in the drawtube, about 1 centimeter below the longest eyepiece. Try the same with the source of light equal to the source-field. (Nelson.)

33. Cover-glasses of Excessive Thickness.—Remove the concave achromatic amplifier from the lower end of the Siedentopf (or other) binocular attachment, and fit it into the lower end of the drawtube of the monocular microscope. Use the 40 objective of 0.65 (or 0.85) aperture. Fit a cover-glass 0.10 millimeter (or more) thick on the wedge-shaped cover-glass of the Abbe test plate by a little immersion oil between. Find the best cover thickness for the combination, by the definition, and by the star test. (The position of the drawtube may be altered.) The

objective might be corrected in a similar way for the covers, 0.4 millimeter thick, used in counting blood corpuscles.

34. Correcting High Dry Objectives for Uncovered Objects.—Using the same objective as in **33,** screw a very low achromatic objective, or fit a suitable converging achromatic lens, into the drawtube. Focus on an uncovered nigrosin smear. Try (altering the drawtube) to get a lens which nearly or quite corrects the objective for an uncovered object, as shown by the star test.

35. Tube Length of the Monobjective Binocular.—Test the binocular, or the binocular attachment, for correct tube length by the star test, using objectives previously proved correct in the monocular microscope. Show that, in the original form of the binocular (Jentzsch), the optical tube length increases half as fast as the interocular distance increases, with a range of about 1 centimeter. (This might perhaps be remedied, as already stated, by having a spiral fitting to each eyepiece tube, so arranged that putting apart the eyepieces causes them to sink for the appropriate distance.)

36. Cover-glass Correction with Binocular.—Test the 40 dry objective of 0.85 aperture, or the 60 oil immersion of 1.3 aperture, with a cover-glass 0.15 or 0.16 thick, instead of 0.17 millimeter. Pull out the eyepieces (fixing them with a cardboard or paper collar, if necessary) sufficiently to correct the error. This will entail an increase of about 10 millimeters in tube length for the 40 dry, and less than 1 millimeter for the 60 oil objective, for each 0.01 millimeter decrease of cover thickness.

37. Magnifying the Eyepiece Circles.—Take a 10- or 16-times triple magnifier, and center it in a tight ring (of card or metal) over the eyepiece, so that it can be readily slipped on and off. Use it to magnify the eyepiece condenser and objective aperture circles, when arranging the $\frac{4}{5}$, $\frac{7}{8}$ or $\frac{9}{10}$ cone for any particular objective and object. It may be used with advantage even for the low-power objectives. (Beck, Coles.)

38. Adjusting the Abbe Camera.—Use an eyepiece with a fairly high eyepoint, preferably a compensating eyepiece. Removing the eyepiece, fit on the camera sleeve. Replace the eyepiece, and center the eyepiece circle in the hole in the silver layer, using a 10-times magnifier for this. Then alter the height of the Abbe cube over the eyepiece until the eyepiece circle does not show parallactic shifting when the eye and the magnifier are moved to one side. Put the mirror of the camera at 45 degrees. Adjust the drawing paper to the same slant as the microscope stage. Adjust the light through the microscope and the light from the paper until they are so proportioned that the pencil point is seen with maximum clearness, as well as the microscopical image. Distance spectacles should be used. (Zeiss.)

39. Measuring Microscopic Objects.—(*a*) Take a micrometer eyepiece with the diaphragm below, such as K 20 of Zeiss. Put the eyepiece micrometer scale in its place right side up, and focus it with distance vision. Calibrate it for the objective used by comparison with a stage (object) micrometer scale. The tube length must be unaltered throughout the series of measurements. Any slight alteration of tube length, or change of correction collar, requires a new calibration; as does the replacement of one objective by another of the same nominal focal length. Measurement with the eyepiece scale is the best method if many small objects have to be measured, such as pollen grains. (*b*) Draw the object with the Abbe camera. Then replace the slide by an object micrometer scale (of about the same thickness as the slide). Draw a few divisions of this scale, with the same objective, the same eyepiece and the same positions of camera and drawing paper. Use the drawn scale to measure the drawing of the object. This is probably the best method when only a few objects in a field, such as chromosomes, are to be measured.

40. Measuring Magnifying Power of Objectives.—Take the micrometer eyepiece scale used in **39.** Take out the scale and measure its length under a lens. Then its degrees

are known. Use this eyepiece scale in the microscope with an object micrometer scale on the stage. The comparison of the two gives the magnifying power (new style) of the objective directly. If the divisions of the eyepiece scale are 0.1 millimeter, and those of the object scale are 0.01 millimeter; then the magnifying power of the objective is equal to the number of eyepiece divisions contained in 10 divisions of the magnified object scale.

41. Use of Light Screens.—With most objectives, the light intensity to be regularly employed should be arranged so as to be too high on using maximum aperture (at maximum useful magnification). This extra intensity permits the use of blue or green screens. Take a 60 apochromatic objective of 1.4 aperture, used with a 100-watt, low-voltage lamp and ground glass. Have a corrected immersion condenser, cover-glass and slide of standard thickness, and a 3-millimeter diaphragm on the source of light. The object may be a well-stained preparation mounted in immersion oil, and showing fine details, such as the chromomeres of Lilium at the pachytene stage. Open the condenser iris to a maximum aperture of about 1.3. Note that the light is too intense for optimum images, even with a 20 eyepiece on the binocular. Try different screens of the Wratten series, Nos. 66, 56, 57A, 58 or 61, or two combined, until the light is reduced in intensity enough for maximum aperture to be allowable. (Coles, Metzner.)

42. Swan Cube as Vertical Illuminator.—Try the vertical illuminator with a small semisilvered cube (like that in the monobjective binocular, but smaller) over the shortened oil-immersion objective corrected for use without a cover-glass. Have the three unused sides of the cube blackened with carbon mixed with balsam. Try if the illumination is superior to that given by the usual parallel-plane glass plate, which also gives full aperture. (The Spencer Lens Company now make such a vertical illuminator, with improvements.)

43. Metallurgical Oil-immersion Objectives for Uncovered Objects.—Try these on the ordinary stained biological

smears and sections, using no cover-glass. Do not omit to increase the tube length about 30 millimeters, or use a collar of that length, so as to make up for the absence of the vertical illuminator. The 74 monobromide of naphthalin immersion objective of 1.6 aperture, can be used in this way on thin stained preparations, without covers, such as smears of bacteria, or chromosomes squeezed from their cells. It gives excellent images of bacteria and chromomeres, with an oil-immersion condenser of 1.4 aperture. A special eyepiece magnifying 15 times has to be used. To obtain more magnification than the resulting 1,110, screw the amplifier from the Zeiss Bitumi eyepiece attachment into the end of the drawtube of a monocular, and increase the tubelength to about 196 millimeters, there being also a 30-millimeter collar.

44. Advantages of Yellow-green Light.—Use an achromatic oil-immersion objective on *Surirella gemma* mounted on the cover in hyrax, the cover-glass being 0.16 millimeter thick. Also use a delicate well-stained preparation, such as spirochætes of the mouth stained with gentian-violet, or pachytene chromomeres of Aloë stained with brazilin. Get the best vision possible with a neutral screen. Then replace this by an appropriate yellow-green screen. Note the increase in definition and resolution. (Spitta, Nelson, Coles.)

45. Use of Bluish-green Light.—This is given by Wratten screen No. 64 (Minus Red 3), or by Minus Red 4, etc. It produces a sharper image with brazilin-stained objects (or those stained with iron-acetocarmine); but cuts off much light, and is not comfortable for long-continued visual observation. It lets through mainly green, with blue, and a trace of yellow. A combination of Wratten screens Nos. 56 and 64 gives an excellent green; which, if intense enough, furnishes a light without red and with but little blue or yellow. This gives especially sharp pictures with the iron-brazilin stain on the monocular microscope. (Nelson, Coles.)

46. Measuring the Aperture of an Oil-immersion Objective.—Put a round drop of Canada balsam on a cover-glass over an object (such as the lines of the Abbe test plate). Wait till it has dried enough to form a toughish surface film. Then focus down a 60 oil-immersion objective of 1.3 aperture with the front lens clean and dry, pressing in the drop of balsam. If the film does not break, there is a thin layer of air between the front lens and the balsam drop, and the corrected immersion condenser cannot give an aperture over 1.0 (Abbe). Measure this condenser circle on the back of the objective by a low objective screwed into the drawtube, and an eyepiece micrometer scale. Then clean the slide and immerse the objective properly in thickened cedar oil, using a full condenser cone with a large source, so as to fill the back of the objective. Measure the diameter of this circle. Calculate the aperture from the measurement of the circle with aperture 1.0, the apertures being proportional to the diameters. (Zeiss, Abbe.)

47. Marking Apertures of Condenser.—Fix a blank paper scale for the iris handle of the condenser to move by. Correct and immerse condenser. Take the objective used in **46.** Use an additional low objective in the drawtube and a micrometer eyepiece. Find the place on the scale for 1.0 aperture by opening the iris till the diameter of the condenser circle on the back of the objective is the amount found in **46.** From this, calculate the diameters of the condenser circle for 0.2, 0.4, 0.6, 0.8, 1.0, and 1.2 aperture. Set the circles at these diameters, and mark corresponding positions of iris handle on scale.

48. Comparison of Dry and Water-immersion Objectives.—Take a dry objective 40 of 0.85 aperture with a correction collar, and also a water-immersion objective 70, also with correction collar. Adjust them for cover thickness, and focus both on an object in water. Note that the water-immersion objective gives perfect images at any depth, while the dry objective has to have its correction collar changed for different depths of the object under water.

49. Comparison of Water- and Oil-immersion Objectives.—Take the 70 water-immersion and the 60 oil-immersion apochromatic objectives. Focus and adjust them for an object mounted in immersion oil. Note that the oil-immersion objective can focus the object at any ordinary depth, with perfect images; but that the water-immersion objective has to have its collar changed for different depths.

50. Testing Revolving Nosepiece.—Remove the nosepiece, and screw the high-power, oil-immersion objective directly on the microscope tube. Focus it, without using oil, on a conspicuous object, such as an isolated pollen mother cell, or a small, round or triangular diatom. Get the object in the center of the field, with the circular image of the 2- or 3-millimeter diaphragm around it. Then replace the nosepiece and try the same objective in the different screw sockets of the nosepiece. If it centers perfectly with the object in one of them, the lower objectives can be made concentric with it, as already explained. If still out of center, the objectives and nosepiece should be sent to the maker for adjustment. This applies to objectives which have not been centered on the nosepiece by the manufacturer. The optical axes of high-power objectives may differ by a few hundredths of a millimeter, so that they cannot well be made *quite* concentric.

QUESTIONS

1. Why is it worth while to attend to points which make only a small improvement in the microscopical image?

2. Name 20 chief points which should be attended to, in order to get the optimum image in the microscope.

3. Why should the microscopist use a low-power Greenough binocular in his early studies, as much as possible?

4. Name nine procedures which would have to be learned in order to obtain nearly perfect microscopical images.

5. Contrast the results of disregarding and of attending to the main rules of scientific microscopy.

6. How is a binocular magnifier superior to a single-lens achromatic magnifier of equal correction?

7. What superiority has the low-power Greenough binocular over the low-power objectives on the monocular microscope?

8. What are the advantages of shielding the unoccupied eye by ground glass when using a single magnifying lens?

9. What advantages has a corrected hand lens over an uncorrected one?

10. What are the peculiar advantages of using a Steinheil triplet as a hand lens?

11. What low-power magnifier may be found most suitable for dissection and drawing?

12. What kind of lens is useful for magnifications of 3 or 4 times?

13. Why should a hand lens be held as near the eye as possible?

14. What is the aperture of a hand lens?

15. Contrast the use of a hand lens when the optical rules are disregarded, and when they are attended to.

16. What is working aperture?

17. What is maximum useful magnification?

18. Why should the source of light be equal to the source-field?

19. What is the condenser light circle?

20. What is the objective (aperture) circle?

21. What are the eyepiece circles, and how can they be readily observed?

22. Where is the eyepoint?

23. What is the permissible maximum size of the eyepiece circles?

24. When can an achromatic *dry* condenser be advantageously employed?

25. When is a corrected *immersion* condenser required?

26. In what way is a condenser to be focused?

27. How can a high-power objective be focused quickly and without risk of damage?

28. Why are high dry objectives at their best with objects in air?

29. When might dry objectives, corrected for *uncovered* objects, be of advantage?

30. Why are water-immersion objectives at their best for objects in water?

31. Why are oil-immersion objectives at their best with objects mounted in immersion oil?

32 What would be the advantage in having oil-immersion objectives corrected for use *without* a coverglass?

33. What are the disadvantages of too low eyepieces?

34. How can much changing of eyepieces be avoided?

35. What is the effect, in the binocular, of a wrong adjustment of the distance between the eyepoints of the eyepieces?

36. How can the correct distance between the eyepieces in a binocular be ascertained for any observer?

37. Why should the eyepieces of the twin-objective binocular be parfocal?

38. How can the aperture of the twin objectives be readily estimated?

39. How can a twin-objective binocular be best tested?

40. What is orthomorphy?

41. How can adjustment for different interpupillary distances be made in the monobjective binocular without altering the optical tube length?

42. What are the optical advantages of parallel tubes in a binocular?

43. What advantage lies in good stereoscopic vision without loss of definition, as in the Greenough binocular?

44. What advantages does the twin-objective binocular possess over the monobjective binocular used stereoscopically?

45. What are the advantages of binocular vision without stereoscopic effect, as compared with monocular vision?

46. How can a usually sufficient stereoscopic effect be attained in the monobjective binocular without loss of aperture or definition?

47. How does the binocular act with regard to the floating motes of the eyes?

48. What effect may the blind spot of the eye have when using the monocular with a large field?

49. What advantages does the monocular have as compared with the binocular?

50. Why should the unoccupied eye be shaded with ground glass, and not kept closed?

51. What is the use of a diaphragm in the drawtube?

52. What are the disadvantages of too-low or too-high eyepieces with any objective?

53. How can marked curvature of the field be avoided?

54. Why should one consider chiefly the high-aperture objectives in choosing the magnification of the eyepieces?

55. How can optical errors due to a poor condenser or wrong cover-glass thickness be hidden?

56. How much is lost by using the 5 times eyepiece, chiefly or wholly?

57. What advantage have objectives of lower aperture, when the maximum aperture is not needed?

58. What are the disadvantages of using a high dry objective of 0.85 aperture on work which could be done by an objective of 0.5 aperture?

59. If the work can be done with an oil-immersion objective of 1.0 aperture, what disadvantages are there in using an objective of 1.3 aperture?

60. What condenser is best for use with natural or artificial daylight?

61. When should Corning daylight glass be used?

62. When is a yellow-green screen of advantage?

63. What special corrections can be applied: (*a*) when working without a cover-glass; and (*b*) when working through a cover 0.4 millimeter thick?

64. What are the five chief methods of illumination for the compound microscope?

65. What is the maximum diameter of the source of light to be used with high oil-immersion objectives?

66. How are source-field, object-field, and image-field defined in this book?

67. What are the requirements as to size of the source-field for the best vision with the highest powers?

68. What sources of light may be used for the best vision with the highest powers?

69. What is the most convenient source of light for both low and high powers?

70. How can ground glass be arranged to transmit only refracted and diffracted (not direct) light?

71. What is the use of the diaphragm close to the source of light?

72. How can the double-ground glass be treated to increase its diffracting power?

73. If the incandescent horseshoe of a C-Mazda lamp is projected by a large condensing lens, close to it, towards the microscope, and the mirror is put in the concavity of the horseshoe (where it would naturally be when all is centered), how can the microscope be best illuminated?

74. What is the best way (theoretically) of using the Abbe uncorrected condenser?

75. Why should the glass of the light filters be nearly plane parallel?

76. What are the advantages of yellow-green light over daylight (or tungsten light altered to daylight value)?

77. How may a graduated series of Wratten yellow-green light filters perform two functions?

78. Name five ways of regulating the intensity (not the aperture) of the light.

79. For what are screens of other colors (not yellow-green) sometimes useful?

80. Why are achromatic objectives so much improved by yellow-green screens?

81. What are the disadvantages of the uncorrected (two-lens) Abbe condenser?

82. How can the aspheric (aplanatic) condenser be correctly used?

83. What is probably the best condenser for routine laboratory work?

84. Why is water immersion to be preferred for the immersion condenser?

85. Why is the achromatic-aplanatic condenser to be preferred?

86. How can a condenser be tested as to adjustment for slide thickness and lamp distance?

87. How can an oil-immersion condenser be corrected for water immersion?

88. How can the aperture of the light cone delivered by the condenser to the object be estimated?

89. What happens to the aperture of the light cone when the condenser is out of focus?

90. Why must not the iris of the condenser be used for regulating the intensity of light?

91. What adjustments are most necessary when a 7/8 or 9/10 cone of light is to be used?

92. What happens if the condenser delivers a larger aperture than that of the objective?

93. How can an immersion achromatic condenser be arranged to show small spirochætes distinctly?

94. Why is the large bicentric reflecting condenser usually preferable to the small pattern?

95. What are the best kinds of objects for the bicentric and cardioid condensers?

96. Why are special oil-immersion objectives necessary for these dark-field condensers?

97. How should the slides and covers be adjusted for best vision with reflecting condensers and objects in water?

98. For what objects are the dark-field condensers, used with objectives of 1.3 aperture, useful?

99. Why do feebly stained bacteria show the complementary color with a dark field?

100. What are the advantages of a dark field?

101. How can the study of stained sections in balsam or immersion oil best be supplemented?

102. What are submicroscopic objects?

103. What is the calculated limit of resolution?

104. What is the limit of useful magnification?

105. What arrangement is needed to examine stained bacteria dry in air?

106. What use did Coles make of paraffin oil in the study of spirochætes?

107. Name six classes of objects, and the objectives most suitable for their study.

108. Why does not the 40 objective usually give, in unpracticed hands, as sharp an image as the 10 objective?

109. How much variation in cover-glass thickness obviously blurs the image of the 40 objective, of 0.85 aperture?

110. What variation in thickness is often met with in No. 1 cover-glasses?

111. Name seven solutions of the cover-glass problem.

112. Which solutions are best (*a*) for routine laboratory work, and (*b*) for research with high powers?

113. Why are objectives of 50 or 25 millimeters usually unnecessary on the routine and research microscopes for high-power work?

114. How is a change of the bright-field condenser avoided on the standard microscope when changing objectives?

115. Why did Abbe state that the use of a 60 oil-immersion objective of 1.3 or 1.4 aperture was a goal to be aimed at?

116. How is the magnification of an objective reckoned in the modern style?

117. How is the magnification of an eyepiece now reckoned?

118. Why is it good to designate both objectives and eyepieces by their magnification numbers?

119. What is the highest useful magnification of an objective plus condenser?

120. How is the highest allowable eyepiece magnification to be reckoned?

121. Why is it better to buy a good condenser than another good objective?

122. What are the advantages of apochromatic objectives?

123. How may an achromatic $\frac{1}{12}$ oil-immersion objective be made nearly equal to an apochromatic?

124. How can objectives be cared for?

125. When are the images given by an oil-immersion objective much impaired?

126. What is the chief use of a water-immersion objective?

127. Why should a water-immersion objective of high power have a correction collar?

128. How are the thicknesses of the cover-glasses to be measured?

129. What precautions are to be taken with a high-power water-immersion objective?

130. What special advantage has the water-immersion objective in searching slides?

131. Why is the oil-immersion objective to be preferred for objects in balsam?

132. Why is it stated that the concave mirror should be abandoned on the high-power microscope? What would do its work?

133. How is a reflecting prism superior to a plane mirror?

134. How is a sliding bar on a square stage an advantage, if no screw object traverser is fitted?

135. Why should the places of the objectives be marked on a revolving nosepiece?

136. When can a centering condenser sleeve be dispensed with?

137. What are two uses of closely centering the fields of the low-power objectives with the image field of the high objective?

138. What are the usual boundaries of the mechanical tube length?

139. How can an 11-millimeter objective of 0.35 aperture be adjusted for use without a cover-glass?

140. What amount of adjustment is required by a 40 objective of 0.85 N. A., for different cover thicknesses? (N. A. = numerical aperture.)

141. What is an amplifier?

142. What is the homal?

143. What substitutes can be advantageously employed for the high-power Huyghenian eyepieces (with eyepoint near the top lens) (*a*) with low-power achromatic objectives, (*b*) with high-power achromatic objectives?

144. What are compensating eyepieces?

145. Why is the eyelens of a Huyghenian eyepiece smaller than that of a corresponding compensating eyepiece without a field lens?

146. Why should eyepieces be parfocal?

147. What is the eyepiece constant?

148. Give an accurate method of measuring with the microscope.

149. How can the magnification of an objective be measured?

150. Why is the Greenough binocular to be regarded as the most important microscope for low-power work?

151. Criticize the writer's suggestions for standard microscopes.

152. Why is the non-stereoscopic binocular most suitable for the routine work of a laboratory?

153. Why are means for moderating the light necessary for all microscopes with corrected condensers?

154. What directions are to be observed in the use of the Abbe drawing camera?

155. What use may be made of the twin-objective binocular magnifying 3.5 times, in drawing?

156. How should microscopical drawings be normally reproduced?

157. Why should the reference letters or numerals in a drawing be inconspicuous?

158. Name seven drawbacks to photography with the microscope.

159. What are two of the optically best pieces of apparatus for photography with the microscope?

160. What are some advantages of the Siedentopf photographic attachment?

161. What color screens and plates are best for ordinary use with the microscope?

162. What is the aim in photography with the microscope?

163. Name some ways of testing an objective for deterioration.

164. Name a good test for the microscope objective.

165. Describe the star test for an objective.

166. What kind of microscope did Galileo use?

167. What kind of microscope did Leeuwenhoek employ for his discoveries?

168. When were the first compound achromatic objectives made?

169. How is the correction for different cover-glass thicknesses made (Ross and Wenham)?

170. What did Wenham invent in 1850?

171. When were water-immersion objectives most popular?

172. Enumerate Abbe's chief microscopical inventions.

173. What was the date of the first practical oil-immersion objectives?

174. What invention was made public in 1886?

175. At what date was the Greenough binocular first made?

176. What is the chief use of the special dark-field condensers?

177. What arrangements often found on the microscope are deemed by the writer superfluous?

178. Mention some possible microscope improvements.

179. Name four books or booklets suitable for beginners in microscopy.

180. What book is especially recommended for the practice of high-power microscopy?

181. What is the most important book on the theory of the microscope, which is also of general interest?

182. What book contains full sources of information on the theory of optical instruments, and especially on the microscope?

183. What is Nelson's method of critical illumination?

184. What are Hartridge's chief contributions to microscopical methods?

185. What was Beck's important discovery with regard to glare?

186. What discoveries were made as to dark field by Siedentopf, Berek, and Coles, respectively?

187. What is the best booklet on color screens?

188. What are the most important points to be considered in caring for an immersion condenser?

189. What are the methods for preserving objectives with their original powers unimpaired for years?

190. In what ways can the Greenough binocular be cared for?

191. What two great discoveries in pure science were made with the achromatic microscope?

192. What is probably the discovery of greatest practical importance yet made with the achromatic microscope?

193. What are the legitimate uses of hypotheses?

194. Name some methods of research.

195. Having purchased a microscope, describe how you would adjust it for best vision.

196. Describe how a 108-watt, 6-volt electric lamp could be arranged for best vision.

197. Give rules for high-power microscopy.

198. Give rules for routine microscopy.

199. Mention some errors with the microscope.

200. Give remedies for some mishaps.

MICROSCOPICAL GLOSSARY

Abbe (pronounced ab′-eh), **Ernst** (ob. 1905), professor in Jena, founder of Carl Zeiss Stiftung, developer of theory of the microscope, and inventor of many microscopical improvements.

Abbe camera. Camera lucida, with a perforated diagonal silver layer in a glass cube (Abbe cube) (Zeiss).

Abbe condenser. Usually the immersion 2- or 3-lens uncorrected condenser, of 1.2 or 1.4 nominal aperture, commonly used dry. (Also rarely an *achromatic* condenser with long focus, large image, and aperture near 1.0.) (Abbe.)

Abbe illuminating apparatus. Rackwork substage, with a second rackwork for lateral movement of the iris of the condenser, and also provision for rotation of this. Useful only for testing objectives, and for oblique pencils of light. (Abbe.)

Abbe test-plate. Ruled lines in a layer of silver deposited under a cover-glass of varying thickness. Useful for testing objectives, especially for star test. (Spitta, Siedentopf, Zeiss.)

Aberrations. Differences between the actual and the required course of light in uncorrected or insufficiently corrected lenses. *Chromatic* aberrations are due to the differing wave lengths of which white light is a mixture. *Spherical* aberrations are mainly due to the spherical form of lens surfaces, which is usually compulsory. (Abbe, Czapski.)

Absorption. Removal of light (usually by its change into heat). Often only for a short range of color (absorption band in spectrum).

Absorption of color. The color of a transparent substance (such as a stained section mounted in balsam) is of course due to its absorption of the complementary colors. Thus a yellow-green screen (such as Wratten No. 58) absorbs most of the red, blue, and violet.

Accommodation. Focusing of the eye, by changes in shape of the crystalline lens, to suit distances, varying from indefinitely far to 8 inches or less. Accommodation may vary with age from 14 diopters or so to zero.

Achromatic. Lens or combination corrected more or less perfectly for (axial) color aberrations; which includes some correction for spherical aberrations also. The back doublets or triplets of a high-power objective are not strictly to be called achromatic, since they have the large excess of corrections required to compensate for the uncorrected front lenses.

Achromatic condensers. Corrected by combinations of flint and crown lenses; either mainly in the axis; or, by following the sine law,

over a wider extent of the image. The latter are sometimes called aplanatic achromatic. (Metz.)

Achromatic objectives. With the spectral colors C and F usually coinciding in focus. The spherical correction is for one color (yellow-green). When improved by the use of new glasses, they approach semi-apochromatics.

Adjusting condensers. Compensating the condensers, by altering distance of lamp, or thickness of slide, or screwing out top lenses, or centering an achromatic converging lens below (Hartridge, Ainslee).

Adjusting objectives. Correcting them, either by a correction collar, or by altering tube length (Nelson, Coles).

Adjusting tube length. Correcting slight spherical aberrations due to cover-glass thickness by lengthening (or less often shortening) the tube length (Nelson).

Amplification. Magnification.

Amplifier. A concave corrected lens used at a certain distance behind the objective to increase the tube length, as in the binocular Bitumi attachment, without shifting the focus and thereby causing errors; or to flatten the projection field, as in the homal (Boegehold).

Annular illumination. Narrow hollow cone from stopped condenser showing bright ring at edge of back of objective. Its aperture should not exceed that of the objective. Gives oblique illumination in all azimuths. Useful only for fine details on more or less transparent objects. (Conrady.)

Apertometer. Graduated glass semicircle for measuring apertures of objectives (Abbe, Zeiss).

Aperture. The size of the cone of light concentrated on any point of an object by the condenser, or receivable from any point of the object by the objective, the two being usually different. The aperture is measured by the length of the perpendicular to the axis from unit distance on the edge of the cone. It is obvious that if the object is not at the apex of the cones of light concentrated by the condenser, the aperture is lessened. Also if all the cones do not have their apices on the visible part of the object, part of the field is viewed with lower aperture. Hence arise the advantages of correcting the condenser both for spherical and chromatic aberrations. Aperture is the sine of half the air angle of incidence of (usually) the extreme rays on the plane of the front of a lens or combination (objective); or *vice versa*, at the back of a lens or combination (condenser). It is often called, after Abbe, numerical aperture (N.A.). If the rays are not in air, this figure is to be multiplied by the refractive index of the immersion fluid (Abbe). (Note that the words "front and back" are used here with regard to the direction of the light.)

Aperture, wasted. By using too low eyepieces (Abbe).

Aplanatic. (1) Lens or combination corrected for a fairly large visual field by observation of the sine law (Abbe). (2) Used erroneously for combinations corrected mainly for axial spherical aberrations (Woodworth).

Aplanatic condenser. Corrected by the sine law either by concave flint lenses, aspheric surfaces, or certain combinations of lenses of one refractive substance (Metz, Zeiss, von Rohr).

Apochromatic. Applied to objectives containing usually one or more lenses of fluorite and lenses of the Jena glasses; and having corrections (1) for the secondary chromatic aberrations, and (2) for spherical aberrations of two different colors and all zones of the objective. The ordinary achromatic objective has only the primary chromatic aberrations corrected, and is corrected spherically for only one color, showing secondary colors. (Abbe.)

Aspheric. Condensers or bull's eyes, etc., corrected for spherical aberration (for one color) by an empirically made aspheric surface, ground flatter towards the margin (Zeiss, Bausch).

Astigmatism. Having different foci in different azimuths. Applied to the eye (with deformed cornea, etc.), or to oblique pencils through an uncorrected lens.

Axis, optical. The line joining the centers of the curved or plane lens surfaces.

Back lens. The last lens passed by the light in an objective or condenser. (This is the strict use of the term.)

Balsam, Canada. Said to be the resin from two species of American conifer. The R.I. of the hard resin is given as 1.56. The hard resin is to be dissolved in xylol. The R.I. of the actual balsam in which the specimens are mounted varies with the amount of xylol unevaporated. A standard mounting medium might be prepared of known R.I. and dispersion. Sections can well be mounted in thickened cedar oil, which has the correct refractive index and dispersion for oil-immersion objectives. (R.I. = refractive index.)

Biconcave. Hollow on both sides.

Biconvex. Bulging on both sides.

Binocular magnifier or microscope. Arrangement for vision with both eyes; either stereoscopic, as in the low-power magnifier with rhombohedral prisms and simple lenses, and in the low-power Greenough with Porro prisms and twin objectives; or non-stereoscopic with a semi-reflecting silvered or platinized surface, and one objective (Abbe, Czapski, Jentzsch).

Borate glass. Jena glass containing borates.

Brightness of the image is due (1) to the intensity of the light, and (2) to the aperture of the objective, the magnification being unaltered. Probably more than 4 per cent of light is lost by reflection at every

refraction between glass and air. This gives a large loss after 20 or more refractions (Koehler, Metzner). No condenser or other apparatus can make an image brighter than the actual source of light.

Brilliancy of image. Freedom from fog or glare, and sharpness of definition.

Camera. (1) Closed box for exposing a photographic slide. (2) Apparatus for superposing the microscope image on the image of an external object. Called "camera lucida," or better, "drawing camera."

Capacity of objective. Its power to define small details; which depends on its aperture, and on the accuracy of correction.

Cardioid condenser. A two-reflection convex-concave dark-field condenser for special work, mostly on objects in water (Siedentopf).

Cassegrain condenser. A two-reflection, concave-convex, dark-field condenser for high-aperture immersion objectives, on objects in balsam or in immersion oil (Nelson).

Centering ring. An arrangement with two screws and a spring, or an excentric ring (Zeiss), for moving short-focus condensers or objectives the fraction of a millimeter required to accurately center them. Useful for adjusting objectives as well as for condensers.

Chromatic aberration (see *aberration*).

Chromatic condenser. Term usually applied to an uncorrected condenser.

Circle, aperture (see *condenser*, *objective*, and *eyepiece*).

Coarse motion of the microscope, by rackwork. (Also called coarse *adjustment.*)

Color corrections. Corrections for differences of refraction or dispersion, in different wave lengths.

Coma. Aberration of oblique cones of light, due to departure from Abbe's sine law.

Combination, of two or more separate lenses to form a system, such as an objective or condenser.

Compensating eyepiece. Eyepiece with a doublet or triplet in place of one lens, calculated so as to equalize the magnification for different colors in the image formed by apochromatic objectives (Abbe).

Compensating the unused eye. By a disc of ground glass.

Concave. Spherically hollow.

Concentric condenser. Dark-field condenser of Jentzsch.

Condenser. Combination of lenses to cast a large enough image of the source of light on the object-field, together with a large enough aperture.

Condenser, achromatic. A condenser corrected at least for axial chromatic and spherical aberration, by lenses of two kinds of glass.

Condenser, achromatic aplanatic. A condenser, preferably immersion, corrected for axial chromatic and spherical aberrations; and also following the sine law, so that a sufficiently wide area of the image of the

source is fairly free from aberrations and gives about the same aperture all over (Metz).

Condenser aperture circle. Image of condenser iris seen on the back of the objective filled with uniform light.

Condenser, aspheric. An immersion condenser, of three lenses of one kind of glass, with the largest lens corrected by grinding to a calculated curve flatter near the margin, so that the spherical aberration is corrected for the whole combination, and one color. Also called "aplanatic" condenser. (Zeiss, Bausch and Lomb.)

Condenser, chromatic. Usually a two-lens condenser similar to that first made by Abbe, and described in 1873. It was made for the use of direct or oblique cones of less than 0.3 aperture. It is now usually replaced, in scientific high-power microscopy, by corrected condensers, especially for high powers. (Abbe, 3.)

Conjugate focus, or image. Corresponding, or coordinate, real or virtual, meeting place of the light rays from points, after passing a corrected lens or lenses.

Contrast in microscopical image. The same as in ordinary photography.

Cornea. The front transparent part of the eyeball.

Corrected lens (or condenser). Commonly made of two or three components of different glasses, arranged so that the spherical and chromatic aberrations are much lessened. (Usually called an *achromatic* lens.)

Correction collar. Screw collar to approximate the one or two front to the two or more back lenses of an objective (or condenser) for thick covers, and separate them for thin covers (or slides). Nearly essential for high dry, and high water-immersion objectives. (Carpenter, 42.)

Corrections of a lens system require long calculation and many trial tracings of rays through the different zones of the lenses. Spherical corrections are attained by properly spacing and ordering the differently curved surfaces of the various lenses of different kinds of glass which are to compose the objective, and changing, in the calculations, both curves of each lens, while keeping the focus. Chromatic corrections depend on the appropriate balancing of the dispersions at convex and concave surfaces of different glasses. In a corrected objective or condenser, the distances of the component simple lenses, or cemented doublets and triplets, are important factors in the calculations. (Abbe.)

Cover-glass. Thin flat glass, best of hard crown, cut into pieces usually less than 50 by 20 millimeters. The cover-glass should be 0.17 millimeter thick, or slightly less, for nearly all purposes. The R.I. is to be about 1.52. For dark-ground illumination, thick plane-parallel covers are sometimes made of glass or quartz. For counting blood corpuscles, covers 0.4 millimeter thick have to be used.

Cover-glass gage. Best in the screw form with "feeler" head.

Crown glass. Usually contains no lead, but lime and alkali with silica.

Curvature of field. Cannot be corrected in the objective. Most conspicuous with low eyepieces. Requires, for correction in photography, concave lenses, such as the homal projection lenses (Boegehold).

Dammar. Resin from a Southern conifer. The colorless lumps are selected, and a little xylol added. The thick solution is decanted after a few days. It is useful for sealing iron-acetocarmine preparations.

Dark field (dark ground). Illumination by beams of light which pass outside the aperture of the objective. (Dark field may also result from vertical illumination through the objective.) With dry objectives and a dark-field condenser, much light may also be reflected from the upper surface of the cover-glass on to the object.

Definition. Sharpness, brilliancy and contrast in the image. Due, *ceteris paribus,* to good corrections for spherical and chromatic aberrations. Good centering is also necessary.

Depth of vision (penetration). Vertical distance within which definition is passably good. Mostly due to accommodation of the eye. Usually slight above 100 magnification.

Diaphragm. Usually a blackened stop with a circular aperture.

Diffraction. Regular scattering of light in definite directions from the edge of a body, or from small bodies. It increases as the size of these decreases and approaches the wave length of the illumination, and is greater with shorter wave length. Submicroscopic bodies are seen by diffracted light. The intensity of this is proportional to the sixth power of their diameters (Rayleigh). A series of evenly spaced lines or dots causes a summing up of the diffractions at the apertures into definite diffraction beams. To give the best diffraction beams, light should fall on a submicroscopic line in an azimuth at right angles to the line (Abbe, Siedentopf, Conrady). The diffracted beam may be polarized at high angles, and then can be freed from useless light by a tourmalin or a Nicol prism, at the correct angle, before the source of light.

Diopter. Optical strength (reciprocal of focal length) of a lens whose focus is 1,000 millimeters. The unit for low-power lenses.

Dispersion. Differences in relative refraction of differently colored lights (of different wave lengths) in different transparent substances. Measured by the ratio of the refraction of violet minus that of red to that of yellow.

Doublet. Two combined lenses, usually cemented.

Drawtube. For lengthening or shortening the optical tube length, and consequent adjustments of objectives for different thicknesses of cover-glass or mounting medium.

Dry objective. One calculated for air between front lens and cover-glass.

Error. Deviation from what is required (aberration).

Eyelens. Back (upper) lens of eyepiece.

Eyepiece. Detachable magnifier of image cast by objective. (1) With a field-lens, and the image between the two lenses (Huyghenian, periplane, etc.). (2) With the image below the lenses, and no field lens (Ramsden, orthoscopic, high compensating).

Eyepiece circles. Seen at eyepoint. Images of condenser aperture circle, and objective aperture circle.

Exit pupil of microscope. The full (Ramsden) circle above the eyepiece (only the central part of which is usually bright) (Abbe).

Field lens. Lower lens of Huyghenian eyepiece.

Finder. A low objective used in searching.

Fine motion of the microscope, by micrometer screw, or by cogwheels, etc. (Also called "fine adjustment.")

Fixation by the eyes. Directing and converging the eyes so that the image of the fixed spot comes on the fovea in both eyes.

Flare. In photography, reflection of light from lens surfaces on to the sensitive plate.

Flint glass. Glass containing lead.

Flooding with light, by opening the condenser iris beyond the aperture of the objective; the extra aperture acting as dark-field illumination.

Fluorescence. Change of wave length of light absorbed and then emitted by certain substances, such as eosin.

Fluorite. Natural calcium fluoride crystallized in the cubical system. Only water-clear pieces, crystallized without strain, are useful for lens making. Its R. I. and dispersion render it more suited to correct the chromatic (and hence also some spherical) aberrations than any artificial glass. (Abbe.)

Fluorite objectives. Contain fluorite, and have the secondary spectrum nearly absent, but not the color differences of spherical aberration. With yellow-green screen they are excellent.

Focus. (1) Point or plane to which plane waves are caused to converge (or from which they diverge) after passing a lens or combination. Distance of this point from the principal plane (focal distance). (2) Any point where a real or virtual image or its object may be.

Fog. An apparent haze over the object, due usually to smears on glass surfaces.

Fovea. The small slightly depressed spot near the center of the retina; where the cones (about 5,000) are close together, and vision is most distinct.

Front lens, of condenser or objective. (1) Strictly, the one the light first meets. (2) By analogy with the objective, the small lens of a condenser is sometimes called the front lens (Spitta).

Glare. Term used to include all cases of extraneous light in the image (except flooding, which is caused by greater aperture in the condenser than in the objective). Beck distinguishes glare due to reflections in

the object, with too large a source-field; and also from reflections in the cover-glass, or slide, or mounting medium. (Beck.)

Glass, Jena. Borates, phosphates and other new materials were used in a series of glasses, tested for their R. I. and dispersion, as well as for durability.

Homal. A concave combination used as an amplifier, with an objective, to project an image for photography at a fixed distance. It has the same corrections as the compensating eyepieces; and in addition, flattens the field. Different homals are made for the low dry, the high dry, and the immersion apochromatics. (Boegehold.)

Huyghenian eyepiece. Eyepiece with the image between the simple lenses, one of which is a field lens. Negative eyepiece.

Hypermetropy. State of the eye when it cannot focus, even for distance, without the assistance of a convex lens.

Illumination of the object is determined (1) by the intensity and (2) by the aperture of the light falling on each point.

Image, real. Place where the rays cross, or where the wave fronts converge to more or less expanded points (aberration discs).

Image, virtual. Place where the rays would cross if prolonged backwards.

Image field. The circle of the image seen through the eyepiece, calculated as if at 250 millimeters distance. Usually about 6 inches across.

Imbedding. Saturating more or less permeable material with a melted substance in lieu of its natural more or less aqueous contents. Usually applied to the graded replacement of water by melted paraffin in plant or animal tissues.

Immersion. Putting a layer of liquid between an objective and the cover-glass, or between the slide and the condenser. The liquid most used for immersion is thickened cedar oil. Specially made objectives and specially corrected condensers are used as water immersion, which is a convenient form, and gives optical results only a little inferior to oil-immersion, though requiring more skill. The inferiority is partly due to the lower aperture of the objectives, 1.25 as compared with 1.4. But on objects in water, the water immersion is often to be preferred; for here the aperture of the oil objective is reduced to or below a limit of 1.33. Glycerin immersion is used with quartz objectives for ultra-violet light.

Incidence, angle of. The angle between a ray and the perpendicular to the surface.

Index of refraction (R.I.). The ratio of the speeds of light *in vacuo* and in the substance in question. Measured by the ratio of the sines of the angles of incidence and refraction.

Intensity of light. A property of the source. No optical apparatus can increase the intensity of the source in an image, but only shifts the

light to a nearer and more convenient place (Abbe). Every loss by reflection at the surface of a lens diminishes the intensity by about 4 per cent.

Interference. Coming together of wave fronts from the same point of the source, in the same or different phase. In the same phase they reinforce one another, in different phases they more or less neutralize one another.

Iris. (1) Circular regulatory diaphragm in the eye. (2) An adjustable circular diaphragm of metal pieces, usually in the lower (front) focal plane of the condenser.

Lens. A transparent colorless piece of glass of various kinds, of quartz, or of fluorite; usually worked to accurate spherical surfaces. Two or three single lenses may be cemented to form a doublet or triplet. Lenses may be (1) convergent, collective, or convex; or (2) divergent, dispersive, or concave.

Lens, biconcave. Concave on both sides.

Lens, biconvex. Convex on both sides.

Lens, meniscus. Convex on one side, and concave on the other.

Lens, plano-concave. Plane on one side and concave on the other.

Light filter. A colored glass, or gelatin film, used to remove light of certain wave lengths.

Luminescence. Visible light coming from the transformation of ultra-violet waves when absorbed by certain bodies.

Luminescence microscope. A microscope with a glassless mirror, a quartz condenser, and quartz or uviol glass slides; for use with ultra-violet screens and the arc light.

Macula. The small area on the back of the eye where sight is fairly sharp. It includes the fovea, where sight is sharpest.

Magnification. Number showing linear increase of size of image as compared with object, the image being always taken as at 250 millimeters (whether in focus there, or not). The magnification number of an objective (with high powers, at 180 millimeters optical tube length) is now used to designate that objective. The magnification of the eyepiece (Huyghenian, or other) is reckoned as the increase of the image the objective would cast without the eyepiece, the final virtual image being supposed to be at 250 millimeters.

Magnification, useless. Magnification over 1,000 times the *working* aperture. Empty magnification. Mere enlargement. (Abbe.)

Magnifier. A low-power lens or microscope.

Micrometer, eyepiece. A disc of glass to fit on the diaphragm of the eyepiece, with a scale photographed on it, usually of tenths of a millimeter. Care should be taken that the right side is uppermost, since the glass and cover-glass of the disc are of different thicknesses. This scale is best used in an eyepiece provided with a lateral screw.

Micrometer, object or stage. An accurately divided scale, usually in hundredths of a millimeter, mounted as an object. Best when engraved. The slide it is on should be of standard thickness. Indispensable for all measurements.

Micron. The unit of microscopical measurement, 0.001 millimeter.

Microscope. An instrument for magnifying near objects, mounted on a stand. Usually a compound microscope with objective and eyepiece.

Microscope, standard. An instrument mainly for medium and high-power work, with a condenser, and usually no objective below 8 or 10 times.

Microscopy. The science and art of the microscope.

Microscopist. A practiced user of the microscope.

Microtome. Machine for cutting thin slices (sections) of plant or animal tissues, usually after permeation with paraffin wax, or with celloidin. Sections in paraffin may be cut of one micron in thickness. If there are no kinks, and the layer of balsam is as thin as possible, these sections may almost or quite touch the cover-glass when mounted, which is the desirable condition.

Monochromatic light. (1) In the strict sense, light of one wave length; as the green of the mercury-vapor lamp, when the yellow, blue, and violet have been removed by a suitable screen. (2) Approximately, light of one color, such as yellow-green, when the red, orange, blue, and violet have been screened out.

Monobjective binocular. Binocular with division of the beams after passage through the objective (Abbe, Jentzsch).

Monocular microscope. Instrument with only one tube, and only one eyepiece; so that one eye is unoccupied.

Mounting an object. Spreading it flat between slide and cover-glass in a suitable medium, after teasing it out, or after sectioning; and usually after staining, also.

Myopy. State of the eyes in which the distance point is fairly close, and the near point is closer than 8 inches or so. Remedied by concave spectacles.

Nicol prism. A bisected and recemented rhombohedral prism of natural calcium carbonate (Iceland spar), which transmits only half the entering light (which should be of approximately plane waves). This half is polarized in one plane.

Non-stereoscopic binocular. Microscope in which the beam is halved by partial reflection and partial transmission at a half-silvered surface, so that the two images are identical. It may be made stereoscopic by halving the exit pupils. (Abbe, Jentzsch.)

Nosepiece, revolving. Arrangement for changing objectives. A good fine motion arrangement will bear the weight of a nosepiece with four objectives. The mechanical tube length must include the depth

of the nosepiece; and one firm, at least, allows for this by fitting an appropriate adapter for a single objective used without a revolving nosepiece. The true centering of the nosepiece is most important.

Object-field. That circular portion of the object, the image of which is seen in a given eyepiece with a given objective. No more than this should be illuminated, or there is more or less glare.

Objective. The chief lens combination of the compound microscope. It receives light from the points of the object in cones of definite aperture, and is usually so constructed (in high powers) as to throw its best image at a distance of 180 millimeters from its back focal plane.

Objective aperture circle. Seen at back of objective. Circle bounding the aperture of all rays, direct or diffracted, passing through objective.

Objectives, dry. The low- and medium-power objectives, which are separated from the cover-glass by air. In consequence of this, the refraction at the upper surface of the cover, and at the plane surface of the front lens, causes spherical aberrations; which, in objectives of over about 0.85 aperture, cannot be properly corrected by subsequent refracting surfaces. (Hence, these are now made with concave front surfaces.) (Abbe, Conrady, Zeiss.)

Objectives, low, medium, and high, as to focal length (power), in the ordinary compound microscope. These are, according to Carpenter, low, if above 12.5-millimeter focus; medium, if above 5 millimeters and if 12.5 millimeters or less in focus; and high, from 5 to 2 millimeters (or even 1.5 millimeters) focal length. Thus, of the ordinary apochromatics, the 16-millimeter is low, the 8-millimeter medium, and the others high-power. (See also Chap. II.)

Objectives, low, medium, and high, as to numerical aperture. Taking the multiplying factor of 2½ corresponding to Carpenter's choice of focal lengths, we should have low aperture, below 0.22; medium aperture, from 0.22 to 0.56; and high aperture, from 0.56 to 1.4. (See also Chap. II.)

Objectives, low, medium, and high, as to useful magnification. (These of course follow the focal lengths.) The low magnifications would be, following Carpenter's scheme, those below 220; the medium, from 220 to 560; and the high from 560 to 1,400. This is for 1,000 times the working aperture. (See also Chap. II.)

Oblique illumination. Usually applied to the lighting of the object by a lateral beam near the margin of the objective, and of less than 0.3 aperture. This might be obtained by an eccentric diaphragm; but it is rarely used now, since it gives incorrect pictures of all but certain fine gratings. Annular illumination, and especially dark-field lighting, are preferable. A nearly full cone usually includes the extreme oblique pencils.

Ocular. Eyepiece.

Oil-immersion objectives have a drop of thickened cedar oil, of refractive index 1.515 for the *D* line, between front lens and cover.

Opal glass contains a milky deposit. Flashed opal glass has a thin layer of milky-white glass on a sheet of transparent glass. If it transmits enough light, which is not usual, opal glass may be used like ground glass, as a secondary source of light for the microscope.

Opaque illumination. This may be effected: (1) by a bull's eye; (2) by an annular lamp; (3) by a concave annular glass reflector (Beck); (4) by vertical illumination through the objective. This last method may well be applied to ordinary objects in a dark field with high-power oil-immersion objectives.

Optic axis. Line through center of the condenser, objective, eyepiece or instrument, including, as nearly as possible, the centers of all lenses.

Optical tube length. Distance from posterior focal plane of objective to anterior focal plane of eyepiece.

Orthoscopic eyepiece, of the magnifier form, with triplet and single eyelens.

Paraboloid. A short truncated glass reflector used for dark-field illumination.

Paraxial. Indefinitely close to the optical axis.

Periplane eyepiece. Has compound eyelens with a field lens, and gives a flatter field (Metz).

Penetration. Depth of vision through lens or microscope without altering adjustments of the microscope. Mostly due to accommodation of the eye.

Plane-parallel glass has its surfaces made optically true and parallel, by grinding and testing.

Polariscope. Arrangement, usually of two Nicol prisms or two tourmalins, of which one polarizes the light, and the other stops most or all of this polarized light, showing objects which alter the polarization bright in a dark field.

Polarized light. Produced or isolated by one Nicol prism, or one tourmalin, and used at the right azimuth to improve definition of fine markings (Stump, 129).

Porro prisms. Usually two right-angled prisms crossed, in each of which the light (of nearly plane waves) undergoes two total reflections. The image is in consequence, inverted. In the compact form, used in the ordinary Greenough, these prisms are combined on each side.

Presbyopy. State of the eye due to increased age, in which the power of focusing the lens is gradually lost, so that only distance vision remains. It is aided by convex reading glasses.

Prism. In optics, a body usually of glass bounded by inclined planes. Prisms are usually regarded as dispersing the colors, but a reflecting prism of isosceles section is achromatic.

Radiant. The source of light; incandescent surface, or illuminated ground glass.

Ramsden circle. The exit aperture pupil of the microscope, the largest circle above the eyepiece. It may be magnified to determine the aperture of the condenser by a Steinheil, 10-times magnifier; by a 15-times compensating eyepiece; or by an inverted Huyghenian eyepiece.

Ramsden eyepiece. With diaphragm below two simple lenses. Rarely used.

Reflection. The change of course of light by an interposed surface, which the light does not penetrate, but makes equal angles on each side of the perpendicular. (Total reflection occurs only in the medium of greater refractive index, and when the angle of incidence is beyond a certain amount [about 40 degrees for glass and air].)

Refraction. The change of course of light which penetrates an interposed surface more or less obliquely. It is measured by the ratio of the perpendiculars on the normal from unit distance on the incident and the refracted ray (sines of the angles). Refraction is different for light of different frequencies of waves.

Refractive index of any substance (R.I.) is the ratio of the perpendicular distances of the ray, before and after refraction, from the normal to the surface (sines of the angles). The substance is presumed to be *in vacuo*.

Resolution of fine gratings. The rendering visible, or photographing, of the correct number of close lines (without regard to their thickness). Resolution is directly proportional to working aperture, and inversely proportional to wave length.

Searcher, finder. A low- or medium-power objective on the nosepiece, used in the systematic examination of a preparation.

Semi-apochromatic. (1) Sometimes applied to objectives with improved color corrections (Spitta); or (2) to fluorite objectives, with the secondary spectrum diminished.

Sharpness. Absence of fog or glare, and freedom from blurring due to spherical aberrations.

Slides. Slips of good plate glass with ground edges and corners, usually 3 inches by 1 inch. Their thickness should be uniform. The writer prefers them 1 millimeter thick. They should be freed from grease below, before using them with a water-immersed condenser.

Solid cone. Light of all apertures focusing simultaneously at a point on the object, and requiring the absence of paraxial spherical aberration in the condenser.

Source-field. That area of the primary or secondary source of light whose image formed in the plane of the object equals the object-field. For good vision, the source of light should be not greater than the source-field, and for ultimate resolution the source should be a small central spot in the source-field. Hence a series of diaphragms, or an iris, is needed, close to the light.

Spectrum. The overlapping series of colored images (real or virtual) resulting when light has been dispersed by oblique incidence on a refractive surface, or by diffraction from a grating.

Spherical aberrations. (1) Axial spherical aberrations due to the spherical shape of the surfaces of the lens; the amount of refraction for the outer zones of a convex lens being greater than for the inner zone. (2) Aberrations for oblique pencils. (3) Differences of spherical aberrations for different colors.

Stage. The platform on which the slide is moved under the objective, at right angles to the optic axis. A mechanical stage is such a platform moved by rack and screws. An object traverser (detachable mechanical stage) is an apparatus for mechanical motion of the slide over the fixed stage, as is also a slide bar.

Stain. A dye, usually selective, applied to tissues, or other microscopic objects, with or without a mordant, and usually partially removed by another reagent (differentiation).

Standard screw. The ordinary objective screw, from the standard of the Royal Microscopical Society.

Steinheil lens. A triplet magnifier, first calculated by Steinheil.

Stereoscopic. Showing views from slightly different angles in the two eyes. In the monobjective binocular, light which forms the left of the aperture pencils coming from points in the (virtual) reversed image must enter the left eye, and *vice versa*, or the vision is pseudoscopic, elevations appearing as depressions. The Greenough binocular is the chief stereoscopic microscope, and has (and must have) erect images.

Stop. (1) A circular central diaphragm, usually below a condenser, for dark-field or annular illumination. (2) Any diaphragm.

Submicroscopic. Smaller than the limit of resolution, so that only the diffraction discs and diffraction lines are seen.

Substage. Sleeve, with rack or screw, arranged to hold the condenser.

Test. An estimation of the optical capacity of the microscope with any objective (which may have deteriorated). The star test is one of the best (for spherical aberration). In this a minute hole in a silver or nigrosin layer is used as object. *Surirella gemma* in hyrax is a good test object.

Total reflection. Reflection of all incident light within the more refracting medium after exceeding the critical angle of incidence.

Tourmalin. A natural crystal, which cut in a certain direction allows only, or mostly, light polarized in one plane to pass. It should be 3 millimeters thick (Beck).

Translucent. Allowing some light to pass, but not usually enough for vision; as in ground glass or opal glass.

Transmission. Percentage of light passed through a transparent substance, such as a colored screen. Usually different for the different colors.

Transparent. Allowing light, at least of certain wave lengths, to pass freely, so that an image (real or virtual) may be formed through it.

Triplet. Three lenses used in combination, and usually cemented together with balsam.

Tube length. Optical tube length is the distance between the back focal plane of the objective and the front focal plane of the eyepiece, and is usually 180 millimeters, in high objectives. Mechanical tube length is the distance between the shoulder of the objective screw and the edge of the drawtube, including the nosepiece, and is usually 160 millimeters (170 millimeters for Leitz microscopes).

Ultramicroscope. Arrangement for strongly illuminating submicroscopic particles on a dark field. Particles down to 0.004 micron may be seen as diffraction discs of uniform size, but different brilliancy.

Verant. Compound lens of low magnification, well corrected, for use in viewing photographs, giving correct perspective.

Virtual image. Points of intersection of the rays, if produced backwards, in the use of a magnifying (or a concave) lens.

Vision. The perception of an image on the retina, especially on the macula; and, for fine detail, on the fovea.

Visual angle. The angle between two straight lines drawn from the ends of any object to the eye.

Water immersion. Connection of objective or condenser with the cover-glass or slide by a drop of distilled water.

Wave length of light is different for different colors, and for the same color in media of different refractive indices.

Working distance. Actual distance between front mounting of objective and upper surface of cover-glass, when object with standard cover-glass is focused.

Working aperture. Mean of objective aperture and used condenser aperture.

Wratten screens. Films of colored gelatin, containing measured quantities of dye, cemented with balsam between two plane glass plates.

Xylol. Useful solvent for balsam and dammar, and for removing immersion oil from the objective and slide.

Zones. Central circle and two or more annular areas around it, in the aperture of an objective. Also applied to certain intermediate errors of spherical aberration, etc.

REFERENCES TO THE LITERATURE OF THE MICROSCOPE

1. ABBE, E. 1871. Über die Bestimmung der Lichtstärke optischer Instrumente . . . *Ges. Abh.*, **1**: 14–44.
2. ———. 1873. Beiträge zur Theorie des Mikroskops und der mikroskopischen Wahrnehmung, *Ges. Abh.*, **1**: 45–100. (This important paper expounds the diffraction theory and many other points.)
3. ———. 1873. Über einen neuen Beleuchtungsapparat am Mikroskop, *Ges. Abh.*, **1**: 101–112. (On the two-lens uncorrected condenser, and dark-field illumination.)
4. ———. 1878. Die optischen Hülfsmittel der Mikroskopie, *Ges. Abh.*, **1**: 119–164. (Shows the need for new optical glasses in order to improve objectives.)
5. ———. 1878. Über mikrometrische Messung mittelst optischer Bilder, *Ges. Abh.*, **1**: 165–172. (Gives optical conditions for special measuring microscopes.)
6. ———. 1879. Über Stephenson's System der homogenen Immersion bei Mikroskop-Objecktiven, *Ges. Abh.*, **1**: 181–195.
7. ———. 1879. On new methods for improving spherical correction, applied to the construction of wide-angled object glasses, *Jour. Roy. Micr. Soc.*, 812–824. (Method of correcting the new oil-immersion objectives.)
8. ———. 1879. Über die Bedingungen des Aplanatismus der Linsensysteme, *Ges. Abh.*, **1**: 213–226. (Restricted meaning of aplanatic.)
9. ———. 1880. Some remarks on the apertometer, *Jour. Roy. Micr. Soc.*, 20–31.
10. ———. 1880. Beschreibung eines neuen stereoskopischen Oculars nebst allgemeinen Bemerkungen über die Bedingungen mikrostereoskopischer Beobachtung, *Ges. Abh.*, **1**: 244–272. (Theory of stereoscopic vision with the microscope, and account of new binocular attachment.)
11. ———. 1880. Über die Grenzen der geometrischen Optik, *Ges. Abh.*, **1**: 273–312. (Defense of the diffraction theory. Instructive reading.)
12. ———. 1881. On the conditions of orthoscopic and pseudoscopic effect in the binocular microscope, *Jour. Roy. Micr. Soc.*, 203–211.
13. ———. 1881. On the estimation of aperture in the microscope, *Jour. Roy. Micr. Soc.*, 388–423.
14. ———. 1882. The relation of aperture and power in the microscope, *Jour. Roy. Micr. Soc.*, 300–309.

15. ———. 1884. On the mode of vision with objectives of wide aperture, *Jour. Roy. Micr. Soc.*, 20–26.
16. ———. 1884. Note on the proper definition of the amplifying power of a lens or a lens system, *Jour. Roy. Micr. Soc.*, 348–351.
17. ———. 1886. Über neue Mikroskope, *Ges. Abh.*, **1**: 450–472. (An account of the production of the apochromatic objectives.)
18. ———. 1889. On the effect of illumination by means of wide-angled cones of light, *Jour. Roy. Micr. Soc.*, 721–724. (Abbe's practical contention here has apparently not been verified by time.)
19. ———. 1890. Über die Verwendung des Fluorits für optische Zwecke, *Ges. Abh.*, **1**: 478–486. (Sources of optical fluorite.)
20. Ainslie, M. A. 1913. Dark-ground illumination in microscopical work, *Jour. Roy. Army Med. Corps*, 379.
21. ———. 1915. Tube-length adjustment, *Engl. Mech.*, June 18, July 2 and 9. (According to Coles, the fullest account.)
22. Akehurst, S. C. 1923. Note on divided mirror for Greenough binocular, *Jour. Roy. Micr. Soc.*, 378–380. Also *Jour. Roy. Micr. Soc.*, 159–160, 1928.
23. Ambronn, H., and H. Siedentopf. 1913. Zur Theorie der mikroskopischen Bildererzeugung nach Abbe, 25 pp., Leipzig. (Practical exercises.)
24. ——— and A. Köhler. 1914. Methoden zur Prüfung der Objektivsysteme, 21 pp., Leipzig. (Practical exercises.)
25. Barnard, J. E. and F. E. Welch. 1925. Practical Photomicrography, London.
26. Bausch, E. Manipulation of the microscope, Bausch and Lomb, Rochester, N. Y.
27. ——— and Lomb. Catalogues.
28. Becher, A. 1925. *Zeit. wiss. Mikrosk.* (On the use of anisol.)
28*a*. Becher, S. 1914. Über eine auf die Struktur des Echinodermskelettes gegründete neue Methode zur Herstellung von polarisiertem Licht, *Zool. Anz.*, **44**: 122.
29. Beck, C. 1921. Notes on Resolution, *Jour. Roy. Micr. Soc.*
30. ———. 1921. The Microscope, Vol. I, London. (Elementary.)
31. ———. 1922. The Photometry of a bull's-eye lens for illuminating microscopic objects, *Jour. Roy. Micr. Soc.*, 389–398.
32. ———. 1922. Glare and flooding with transmitted light, *Jour. Roy. Micr. Soc.*, 399–405. (Important experiments described.)
33. ———. 1923. The Microscope, Vol. II, London. (Fundamental experiments on glare.)
34. Belling, J. 1923. Microscopical methods, *Amer. Naturalist*, **57**: 92–96. (Methods for use with iron-acetocarmine preparations.)
35. ———. 1925. Compensating the unoccupied eye in monocular instruments, *Science*, **62**: 54–55.

36. ———. 1925. Photographing chromosomes, *Jour. Roy. Micr. Soc.*, 445–446. (Use of the Phoku apparatus.)
37. BEREK, M. 1920. (On the characteristic constants of microscope objectives.) *Zeit. wiss. Mikrosk.*
37*a*. ———. 1920. Die Schärfentiefe des Mikroskops, *Zeit. wiss. Mikrosk*, **37**: 120.
38. ———. 1921. Über selektive Beugung im Dunkelfeld und farbige Dunkelfeldbeleuchtung, *Zeit. wiss. Mikrosk*, **38**: 237–257. (Important for visibility.)
38*a*. ———. 1923. Zur Theorie der Spiegelkondensoren für Dunkelfeldbeleuchtung und Ultramikroskopie, *Zeit. wiss. Mikrosk.*, **40**: 225.
39. ———. 1924. Betrachtungen zur Darstellung des Abbildungsvorganges im Mikroskop, *Zeit. wiss. Mikrosk.*, **41**: 1–15. (An excellent account.)
40. BOEGEHOLD, H., and A. KÖHLER. 1922. Das Homal, ein System, welches das mikrophotographische Bild ebnet, *Zeit. wiss. Mikrosk.*, **39**: 249–262. (Account of the new projection lens.)
41. BOEGEHOLD, H. 1924. Die Lupe. Das zusammengesetzte Mikroskop. Grundzüge der Theorie der optischen Instrumente, 359–505. Czapski-Eppenstein, Leipzig. (CZAPSKI's original account, twice revised. An excellent short treatise on lens and microscope.)
42. CARPENTER, W. B. 1875. The microscope and its revelations, London. (A classical work, readable today.)
43. ——— and DALLINGER. 1901. The microscope and its revelations, Vol. I, London. (Rather out of date, but gives a good account of the diffraction theory.)
44. CHANCE BROTHERS. 1923. Contrast filters, *Jour. Roy. Micr. Soc.*, 371. (New glass color screens.)
45. COLES, A. C. 1915. An easy method of detecting Spirochæta pallida, and other spirochætes, *Brit. Med. Jour.* (Dark field with dry stained objects.)
46. ———. 1922. Critical microscopy, London. (An excellent book, describing a new method.)
47. ———. 1926. The star test for microscopic objectives, *Watson's Micr. Rec.* **7**: 16–19. (Probably the best test known.)
47*a*. ———. 1927. Relief staining of bacteria, protozoa, infusoria, *Watson's Micr. Rec.*, **10**: 23–25. (An important method.)
48. CONRADY, A. E. 1904. Theories of microscopical vision, *Jour. Roy. Micr. Soc.*, 610–633. (Excellent account of the diffraction theory.)
49. ———. 1905. Theories of microscopical vision, *Jour. Roy. Micr. Soc.*, 541–553. (A continuation of the foregoing paper.)
50. ———. 1912. (On dark-ground illumination.) *Jour. Quekett Micr. Club*, 475–480.

51. ———. (On lens making, etc.) Dictionary of applied physics, Vol. IV, Macmillan, London. (Practical account.)
52. CZAPSKI, S. 1889. Über ein System von der Apertur 1.60 (Monobromnaphthalin), *Zeit. wiss. Mikrosk.*, 417–422.
53. ———. 1891. Die voraussichtlichen Grenzen der Leistungsfähigkeit des Mikroskops, *Zeit. wiss. Mikrosk.*, 145–155.
54. ———. 1893. Theorie der optischen Instrumente nach Abbe, Breslau. (The first edition of this valuable book.)
55. ———. 1894. Über einen neuen Zeichenapparat und die Construction von Zeichenapparaten im allgemeinen, *Zeit. wiss. Mikrosk.*, 289–298.
56. ——— and W. GEBHARDT. 1897. Das stereoskopische Mikroskop nach Greenough und seine Nebenapparate, *Zeit. wiss. Mikrosk.*, 289–312. (The original account.)
57. ———-EPPENSTEIN. 1924. Grundzüge der Theorie der optischen Instrumente nach Abbe, 3. Aufl., Leipzig. (An excellent and full compendium of optical knowledge, with a complete bibliography of over 80 pages.)
58. DENHAM, H. J. 1923. Reduction of microscope fatigue, *Bot. Gaz.*, 311. (Variable resistance for microscope lamp.)
59. DIETTRICH. 1925–1926. Mouches volantes. Die optischen Grundlagen und die Verhütung des Mückensehens. Mikrokosmos, **19**: 69–72.
60. DIPPEL, L. 1882–1883. Das Mikroskop und seine Anwendung, Braunschweig. (Gives a good description of German microscopy before 1882. Also a summary, direct from Abbe, of the diffraction theory.)
61. EASTMAN KODAK COMPANY. Photomicrography. Rochester, N. Y.
62. ———. Light filters. Rochester, N. Y. (Excellent.)
63. EHRINGHAUS, A. 1921. Das Mikroskop, seine wissenschaftlichen Grundlagen und seine Anwendung. Leipzig and Berlin. (A booklet recommended by Erfle, and deserving such recommendation.)
64. EPPENSTEIN, O. See CZAPSKI.
65. ERFLE, H. 1920. Über den Unterschied zwischen den Okularen von Huygens und denen von Ramsden und über die Abhängigkeit der Brennweite solcher Okulare von der Wellenlänge, *Central-Ztg. Opt. Mech.*, 79–83, 91–95, 124.
66. GAGE, S. H. 1927. The Microscope. (Good account of management of classes in vertebrate embryology, etc. Also of projection, drawing, and arrangement of apparatus.)
67. GULLSTRAND, A. 1909. In Vol. I of the 3rd edition of HELMHOLTZ's Handbuch der Physiological Optik, Hamburg and Leipzig. (The authority for the optics of the eye.)

68. HAGER, H., and C. MEZ. 1920. Das Mikroskop und seine Anwendung, Berlin. (Excellent accounts of practical applications of microscopy.)
69. HARTRIDGE, H. 1913. The measurement of working aperture, *Jour. Roy. Micr. Soc.*, 363–364.
70. ———. 1918. An improved method of apertometry, *Jour. Roy. Micr. Soc.*, 337–348.
71. ———. 1919. (On illumination of microscope objects.) *Jour. Quekett Micr. Club.* (A fundamental article.)
72. ———. 1919. Eyepieces with adjustable compensation, *Jour. Roy. Micr. Soc.*, 15–19.
72*a*. ———. 1920. A water-soluble immersion fluid, *Jour. Physiol.*, **53**: 82.
72*b*. ———. 1922. Monochromatic illumination, *Jour. Roy. Micr. Soc.*, 406.
72*c*. ———. 1923. Physiological limits to the accuracy of visual observation and measurement, *Phil. Mag.*, **46**: 49.
72*d*. HAUSER, F. 1925. Hilfsmittel für die Mikroskopie in auffallenden Licht bei biologischen Untersuchungen, *Zeit. wiss. Mikrosk.*, **42**: 280.
72*e*. HEIMSTÄDT, O. 1911. Das Fluoreszenzmikroskop, *Zeit. wiss. Mikrosk.*, **28**: 330.
73. ———. 1925. Über mikroskopische Stereo-Okulare, *Zentral-Ztg. Optik Mech.*, **46**: 77–79. (As made by Reichert, this includes two convex lenses.)
74. HEURCK, H. van. 1898. Étude sur les objectifs apochromatiques, *Ann. Soc. Belg. Micr.*, 41–73.
75. ———. 1907. Les médiums à haute indice, *Ann. Soc. Belg. Micr.*, 56–63.
75*a*. IGNATOWSKY, W. V. 1908. Ein neuer Spiegelkondensor, *Zeit. wiss. Mikrosk*, **25**: 64.
75*b*. JENTZSCH, F. 1910. Über Dunkelfeldbeleuchtung, *Verh. Deutschen phys. Ges.*, **12**: 975–991.
76. ———. 1913. Das binokulare Mikroskop, *Zeit. wiss. Mikrosk.*, 299–318. (Account by the inventor.) (See also, The binocular microscope, 1914, *Jour. Roy. Micr. Soc.*)
77. ———. 1921. (Dark-field illumination.) Kraus-Uhlenhuth Handb. d. mikrobiol. Technik, Vol. I. (A good account.)
78. KEELEY, F. J. 1909. Microscopical image formation, *Proc. Acad. Nat. Sci.*, Philadelphia, 177–192. (Some interesting experiments.)
78*a*. KELLNER, M. 1927. Lifa-Lichtfilter-Handbuch, Augsburg.
78*b*. KERN, C. 1926. Fluoreszenz und Beugungserscheinungen im Dunkelfeld, *Zeit. wiss. Mikrosk.*, **43**: 305.
79. KODAK, LTD. Photomicrography.
80. ———. Light filters. London.

81. KÖHLER, A. 1893. Ein neues Beleuchtungsverfahren für mikrophotographische Zwecke, *Zeit. wiss. Mikrosk.*, 443–440. (Image of source in iris of condenser.)

82. ———. 1899. Beleuchtungsapparat für gleichmässige Beleuchtung mikroskopischer Objecte mit beliebigem einfarbigen Licht, *Zeit. wiss. Mikrosk.* 1–28.

83. ———. 1904. Mikrophotographische Untersuchungen mit ultraviolettem Licht, *Zeit. wiss. Mikrosk.*, 129–165; 273–304.

84. ———. 1907. Swingles Einstellverfahren für die Mikrophotographie mit ultraviolettem Licht, *Zeit. wiss. Mikrosk.*, 360–366.

85. ———. 1910. Über die Verwendung des Quecksilberlichts für mikroskopische Arbeiten, *Zeit. wiss. Mikrosk.*, 329–338.

85*a*. ———. 1922. Übersicht über die optische Einrichtung des Projektionsmikroskops, *Zeit. wiss. Mikrosk.*, 225–248.

86. ———. 1923. Das Mikroskop (und seine Anwendung) Handb. der biol. Arb., E. Abderhalden. (A complete account of the nature and use of a lens magnifier.)

86*a*. ———. 1927. Mikrophotographie, Handb. der biol. Arb., E. Abderhalden. Vol. II, pp. 1691–1978, Berlin.

86*b*. KOENIGSBERGER, J. 1911. Methoden zur Erkennung submikroskopischer Strukturen, *Zeit. wiss. Mikrosk.*, 34.

87. LEE, A. BOLLES. 1902. L'éclairage et l'emploi du condensateur dans la micrographie histologique, *La Cellule*, 405–431. (An excellent paper on the use of the corrected condenser.)

88. LEHMANN, H. 1913. Das Lumineszenz-Mikroskop, seine Grundlagen und seine Anwendung, *Zeit. wiss. Mikrosk.*, 417–470.

89. LEITZ, E. Catalogue of lenses and magnifiers.

89*a*. ———. Catalogue of accessories.

90. ———. Catalogues of microscopes. Booklet of instructions.

91. ———. Gebrauchs-Anweisung zum Dunkelfeldkondensor.

91*a*. LIHOTZKY, E. 1925. Über Mikroskope und Doppelokulare für binokulare und stereoskopische Beobachtung, *Zeit. wiss. Mikrosk.*, **41**: 305.

92. LISTER, J. J. 1913 (1842–1843). On the limit to defining power, in vision with the unassisted eye, the telescope, and the microscope, *Jour. Roy. Micr. Soc.*, 34–55. (Unpublished for 70 years. Recognizes diffraction as cause for increased definition with larger apertures.)

93. MAEY, E. 1912. Die räumliche Lagerung von Kanten im mikroskopischen Object bei Dunkelfeldbeleuchtung, *Zeit. wiss. Mikrosk.*, 48–57.

94. MANDELSTAM, L. 1911. Zur Abbeschen Theorie der mikroskopischen Bilderzeugung, *Ann. der Phys.* 881–897.

95. MEES, C. E. K. Atlas of absorption spectra, Eastman Kodak Company. (A thorough measurement of transmission for all wave lengths.)

96. MERLIN, A. A. C. E. 1925. *Watson's Micr. Rec.* (On the limits of microscopical vision.)
97. METZ, C. 1912. Der aplanatische und achromatische Kondensor, *Zeit. wiss. Mikrosk.*, 553–562. (Excellent account of the uses of a corrected immersion condenser.)
98. ———. 1920. (Periplane oculars.) *Zeit. wiss. Mikrosk.*, 49.
98*a*. ———. 1920. Apertometer für Trockensysteme und Ölimmersionen, *Zeit. wiss. Mikrosk.*, 54.
98*b*. METZNER, P. 1920. Eine einfache Methode der Aperturbestimmung an Immersionsobjektiven, *Zeit. wiss. Mikrosk.*, 203.
98*c*. ———. Das Mikroskop. Leipzig, 1928. (An excellent and full, up-to-date account.)
99. MIE, G. 1908. Beiträge zur Optik trüber Medien, speziell kolloidaler Metallösungen, *Ann. der Phys.* 377–445.
100. NAUMANN, E. 1918. Uber die okulare Begrenzung des mikroskopischen Gesichtsfeldes, *Zeit. wiss. Mikrosk.*, 241–242.
101. NELSON, E. M. 1910. Critical Microscopy, *Jour. Roy. Micr. Soc.*, 282–289. (See also many other useful articles by NELSON in the *Journal of the Royal Microscopical Society* and in the *English Mechanic.*)
102. NEUMANN, F. 1925. Die Sichtbarmachung der Bakteriengeisseln am lebenden Objekt im Dunkelfeld, *Zentr. Bact.*, **96**: 250–262. (Prefers Leitz mirror condenser and the X objective of Zeiss. Bacteria mounted in 5 to 7 per cent of gelatin or other colloid.)
103. PETERSEN, H. 1925. Neues über Stufenphotogramme, *Zeit. wiss. Mikrosk.*, 74–75.
104. RAYLEIGH, J. W. STRUTT, LORD. 1896. On the theory of optical images, with special reference to the microscope, *Phil. Mag.*, 167–195.
105. ROHR, M. VON. 1903. The verant, a new instrument for viewing photographs from the correct standpoint, *Phot. Jour.*, 279–290.
106. ———. 1906. Die optischen Instrumente. Leipzig.
107. ———. 1918. Das Auge und die Brille, 2 Aufl., Leipzig and Berlin. (An authoritative account.)
108. ———. 1920. Die binokulare instrumente, 2 Aufl., Berlin.
109. ———. 1924. Das Auge; Das Sehen; Die Brille; in CZAPSKI-EPPENSTEIN, Grundzuge der Theorie der optischen Instrumente, 370–433. (All excellent.)
110. SCHEFFER, W. 1911. Wirkungsweise und Gebrauch des Mikroskops und seiner Hilfsapparate. Leipzig and Berlin.
111. ———. 1919. Systematische Zusammenstellung und Übersicht der mikroskopischen Objectstrukturen, etc., *Zeit. wiss. Mikrosk.*, 17–32.
112. SCHMEHLIK, R. 1916. Trugbilder, hervorgerufen durch unzweckmässige Beleuchtung, *Zeit. wiss. Mikrosk.*, 351–353.

112*a*. ———. 1920. Polarisation im binokularen Instrument., *Zeit. wiss. Mikrosk.*, 136.

113. SCHMIDT, W. J. 1918. Deckglasdicke, Tubuslänge, und Objecktive mit Korrektionsfassung, *Biol. Zentr.*, 269–276. (A critical account of microscopy in university classes.)

114. SIEDENTOPF, H. 1907. Paraboloidkondensor, eine neue Methode für Dunkelfeldbeleuchtung zur Sichtbarmachung und zur Moment-Mikrophotographie lebender Bakterien, etc., *Zeit. wiss. Mikrosk.*, 104–108.

115. ———. 1908. Über mikroskopische Beobachtungen bei Dunkelfeldbeleuchtung, *Zeit. wiss. Mikr.*, 273–282.

116. ———. 1908. Die Sichtbarmachung von Kanten im mikroskopischen Bilde, *Zeit. wiss. Mikrosk.*, 424–431.

117. ———. 1909. Über ultramikroskopische Abbildung, *Zeit. wiss. Mikrosk.*, 391–408. (Account by the chief authority.)

117*a*. ———. 1910. Über einen neuen Fortschritt in der Ultramikroskopie, *Verh. d. Deutschen physik. Ges.*, **12**: 6.

118. ———. 1912. Über ultramikroskopische Abbildung linearer Objekte., *Zeit. wiss. Mikrosk.*, 1–47. (A full theoretical account.)

119. ———. 1912. Übungen zur Dunkelfeldbeleuchtung, 26 pp., Leipzig.

120. ———. 1915. Über das Auflösungsvermögen der Mikroskope bei Hellfeld- und Dunkelfeldbeleuchtung, *Zeit. wiss. Mikrosk.*, 1–42. (A full theoretical account.)

121. ———. 1921. Uber den Kontrast im mikroskopischen Bilde, *Verh. Dtsch. Pathol. Ges.*, 83–88.

121*a*. ———. 1924. Über Einstellung des Okularabstandes am binokularen Mikroskop, *Zeit. Physik.*, **21**: 178.

122. ———. 1925. Über farbenmikrostereoskopische Täuschungen und ihre Vermeidung, *Zeit. wiss. Mikrosk.*, 16–24.

123. ——— and R. ZSIGMONDY. 1903. Über Sichtbarmachung und Grössenbestimmung ultra-mikroskopischer Teilchen, etc., *Ann. der Phys.*, 1–39.

124. SOUTHALL, J. P. C. Mirrors, prisms and lenses. A textbook of geometrical optics. New York. (An excellent elementary account.)

125. SPANGENBERG, K. 1921. Erscheinungen an der Grenze von dünnen Objekten im Mikroskop, *Zeit. wiss. Mikrosk.*, 1–28.

126. SPENCER LENS COMPANY. Catalogues. Booklet of instructions.

127. SPITTA, E. J. 1920. Microscopy. London. 3rd Ed. (A well known and reliable volume.)

128. STREHL, K. 1900. Theorie der allgemeinen mikroskopischen Abbildung. Diss. Erlangen. Junge & Sohn.

128*a*. ———. 1905. Beugungsbild und Absorptionsbild, *Zeit. wiss. Mikrosk.*, **22**: 1.

129. Stump, D. M. 1922. An application of polarized light to resolution with the compound microscope, *Jour. Roy. Micr. Soc.*, 264–266. (Two Nicols, at right angles, close before condenser.)
129*a*. Szegvary, A. 1924. Über ultramikroskopische Untersuchungen bei einseitiger Beleuchtung, *Zeit. Physik*, **21**: 348.
129*b*. Vonwiller, P. 1924. Eine neue Mikroskopiermethode für die Beobachtung lebender Organismen und ihre ersten Ergebnisse, *Zeit. wiss. Mikrosk.*, 190.
129*c*. ———. 1926. Über indirekte Beleuchtung in der Mikroskopie im senkrecht auffallenden Licht, *Protoplasma*, **1**: 177.
129*d*. Walkhoff. 1922. Darstellung feinster Strukturen durch ultraviolettes Licht, *Sitzungsber. d. Ges. f. Morph. v. Physiol. Munchen*, **33**: 7.
130. Watson & Sons. Catalogues. Booklet of instructions.
130*a*. Weimarn, P. P. v. 1907. Über die Möglichkeit der Erweiterung der ultramikroskopischen Sichtbarkeitsgrenze, *Koll.-Zeitschr.*, **2**: 175.
131. Wenham, F. H. 1853. On the application of binocular vision to the microscope, *Trans. Micr. Soc. London*, 1–13.
132. Winkelmann, A. 1906. Zur Demonstration der Abbeschen Theorie des Mikroskopes, *Ann. phys.*, 416–420.
133. Wood, R. W. 1900. An application of the method of striæ to the illumination of objects, *Phil. Mag.*, 347–349.
133*a*. Woodworth, C. W. Microscope Theory. (Construction of objectives.)
133*b*. Wright, F. E. 1909. Artificial daylight for use with the microscope, *Amer. Jour. Sci.*, **27**: 1.
134. Zeiss, C. Binocular attachment, Bitumi, *Micro* 355.
135. ———. Booklet of instructions (Marquette).
136. ———. 1925. Dunkelfeldbeleuchtung mit Kardioidkondensor nach Siedentopf (Ausführung 1925), *Mikro* 407.
137. ———. 1925. Gebrauchsanweisung für die Leuchtbildkondensor für Ausstrichpreparate, *Mikro* 406.
138. ———. Use of Abbe camera, *Micro* 118.
139. ———. Microscopes and accessories, *Micro* 400.
140. ———. Use of Abbe test-plate, *Micro* 116.
141. ———. Measuring apertures, *Micro* 114.
142. ———. Testing immersion oil, *Micro* 371.
143. ———. Dark-field condensers, *Micro* 230, 365, 407.
144. ———. Greenough binocular, *Micro* 375.
145. ———. Anastigmatic magnifiers, *Micro* 188.
146. ———. Vertical illuminator, *Micro* 89.
147. ———. Cardioid condenser, *Micro* 407, 306.
148. ———. Paraboloid condenser, *Micro* 230.
149. ———. Luminous spot-ring condenser, *Micro* 406.

150. ———. Objective changers, *Micro* 82.
151. ———. Micrometer eyepieces, *Micro* 273.
152. ———. Photographic eyepiece, *Micro* 373.
153. ———. Bitukni attachment, *Micro* 412.
154. ———. Spectacle magnifiers, *Opto* 5.
155. ———. Homal, *Micro* 390.
156. ———. Objectives and eyepieces, *Micro* 367.
157. Zsigmondy, R. 1913. Über ein neues Ultramikroskop, *Physikal. Zeitschr.*, **14**: 975.

INDEX

A

Abbe, achromatic condenser, 86, 201
  aperture and focal length, 119
  apochromatic objectives, 199
  binocular eyepiece, 52, 202
  camera, use of, 161
  inventions, 198
  meaning of aplanatic, 86
  oil-immersion objective, 132, 199
  papers on microscope, 211
  sine law, 86
  stereoscopic vision, 49
  test plate, use, 260
  three-millimeter objective, 118
  uncorrected condenser, 81
    immersion, 201
  working aperture, 12
Aberration, spherical, star test for, 257
Acetic acid as mounting medium 103
Achromatic objectives, 125
Adjustment of condenser, 89
Agapanthus umbellatus, chromomeres, 221
Agar, for mounting, 102, 178
Ainslie, best tube length, 56
  lamp distance, 11
Air, mounting in, 102, 255
Akehurst, double mirror, 41
Allium triquetrum, prophases of, 225
Aloe striata, chromomeres, 220
Amœba, in cultures, 240
Amphipleura pellucida, in hyrax, 235
Amplifier, use of, 143, 257
Aperture, circle of condenser, 90
  concave mirror, 137
  condenser, 87, 256
    marking, 267
Aperture, condenser, uncorrected, 83
  lens, 18
  and magnification, 119
  objective, measuring, 267
  reduction of, 255
  working, 26
Apertures in air, water, and oil, 255
Apochromatic objectives, 125
Apparatus, necessary, 156
Ascaris, chromosomes, 238
Aspheric condenser, 85
  condensing lens, 71
Astigmatism, correction for, 44

B

Bacteria, alive, 232
  without cover-glass, 233
  dark field, 232
  dry, in dark field, 234
  India-ink smear, 234
  mounted dry on cover, 102, 233
  nigrosin smear, 234
  water-immersion objective, 233
Baker, centering sleeve, 139
Barnard, mercury arc, 206
  neutral screens, 11, 78
Bausch and Lomb, achromatic objective, 158
  aspheric bull's eye, 71
  aspheric condenser, 205
  booklet of instructions, 209
  eyepieces, 148
Becher, anisol, 179
Beck, advanced book on the microscope, 210
  dark-field condenser, 202
  elementary book on microscope, 209
  large cones, 203
    papers on, 212

Beck, lens over eyepiece, 81
  maximum cone, 92
  reflections in slide, 68
  resolution with dark field, 203
  source, diaphragm, 11, 67, 69
    small, 203
  superposed ground glass, 78
  tourmalins, 231
Berek, colors in dark field, 95, 212
Bicentric condenser, 94
Binocular, attachment, 47, 52, 143
  care of, 183
  converging-tube, with reading spectacles, 54
  correcting glasses for, 24, 25
  cover-glass correction, 263
  distance between eye-points, 23
  fields of, 23
  increasing tube length of, 113
  magnifiers, 22, 24
  miniature, 23
  monobjective, construction, 46
    disadvantages of, 52
    origin of, 202
    practical points, 53
    stereoscopic effect of, 49
    summary, 52
    tube length, 263
  parallel-tube, with distance spectacles, 54
  parallel tubes, advantages of, 48
  spectacles for, 24, 25
  suggested, 23
  testing, 173
  twin-objective, adjustment of, 39
    care of, 184
    centering, 42
    cleaning, 42
    construction of, 38
    convergence in, 37
    correcting glasses for, 45
    with distance spectacles, 45
    divided mirror for, 41
    double prism for, 41
    eyepiece distance, 39
    eyepieces for, 40
    faults of, 42
    focusing, 39
    illumination, 40
Binocular, twin-objective, low-power, 23, 37
    objectives for, 40
    objects for, 105
    origin of, 201
    original account of, 43
    practical points, 44
    with reading spectacles, 45
    source of light for, 41
    summary, 44
    tests of, 43
  vision, non-stereoscopic, 50
    stereoscopic, 43, 49
  yellow-green filters for, 75
Binoculars, compared, 37
Bitukni binocular attachment, 52, 106
Bitumi binocular attachment, 47
Blind spots, 50
Blood, preparations of, 239
Boegehold, homal, 203
Brazilin, in immersion oil, 105
  preparations stained with, 243
Brown, simple microscope, 197
Brownian movement, with water-immersion objective, 240
Bruecke magnifier, 196
Bull's eye, disadvantages, 72, 73
  near source, 71

C

Cambium, tissues from, 231
Camera, Abbe, adjusting, 264
    use of, 161
  photographic, 166
Canada balsam, as mounting medium, 103
  disadvantages of, 103
  objects in, 99
Canna flaccida, chromosomes, 226
Cardioid condenser, 94
Carpenter, book on the microscope, 198
  stereoscopic vision, 52
Carpenter-Dallinger, aperture of uncorrected condenser, 83
Cassegrain condenser, 95
Cedar oil, as clearer, 242
  as mounting medium, 103

Cedar oil, refractive index, 103
Cell layers, origin, 232
Cell theory, 215
Centering collar, 157
condenser, 80, 154, 256
mirror, 138
objectives, 126, 140
sleeve, 205
Chance, colored glass, 77, 176, 204
cover-glasses, 178
Chara, antheridia, 231
Chevalier, achromatic objective, 197
Chironomus, chromosomes, 238
Chrom-acetic-formalin, preparation, 244
Chromomeres, counting, 217
Galtonia, 218
ultimate, 219
visibility, 241
Chromosome bivalents, nodes of, 222
Chromosome theory of inheritance, 216
Chromosomes, Allium, 225
amphidiploids, 225
Canna, 226
chains in Oenothera, 227
in Rhoeo, 227
deficient, 228
extra, 228
grasshopper, 235
haploids, 219, 228
measurement of, 144
non-reduction, 224
quadrivalent, in Datura, 224
segments of, 219
Tradescantia, 229
triploid hyacinths, 221
trivalent, in Canna, 226
in Datura, 224
in hyacinths, 223
in tomato, 224
in Tulipa, 224
unequal homologues, 237
Circle, condenser, 29
objective, 29
Circles, eyepiece, 30
Circulation of blood, 240
of cytoplasm, 235
Citrus, polyembryony, 230
Cleavage of ova, 238
Coles, book on the microscope, 210
bull's eye, 71
center stop for dark field, 93
centering mirror, 138
dry condenser, 86
fluorite objectives, 126, 158
illumination, 67
lamp flame, 68
nigrosin smear, 234
nosepiece, 141
objectives on nosepiece, 140
one-sixteenth objective, 118
paper on spirochætes in dark field, 212
paraffin oil, 103
rackwork on drawtube, 56, 144
red-stained bacteria, 188
stained spirochætes, 102
star test, 173
twenty objective, 118
Color screens, 75
Colors, complementary in dark field, 95
Condenser, accessory lens for, 85
achromatic, 85
dark field with, 253
achromatic-aplanatic, 85
adjusting for lamp-distance, 3
adjustment, 89
aperture, 87, 256
circle, 90
aplanatic, 85
aspheric, focusing for color, 91
with green screens, 85, 253
bicentric, dark field with, 94, 254
cardioid, dark field with, 94, 254
care of, 176
Cassegrain, dark field with, 95, 254
centering, 80, 154, 205
by light circle, 256
circle, 29
corrected, and small source, 249
correcting, 87
dark-field, 93, 202
advantages of, 96
centering, 95
with high apertures, 95

Condenser, dark-field, for objects in water, 94
testing, 173
training in the use of, 3
dry, 86
achromatic, 32
corrected by unscrewing, 252
focal differences, 88
test for correction, 249
focusing, 32
history of, 201
immersion, 32
immersion oil with, 86
iris, adjustment of, 2
kinds of, 80
lamp distance, 251
lenses for correcting, 90
Leuchtbild, dark field with, 95, 202, 254
marking apertures of, 267
oil-immersion, corrected for water-immersion, 252
over-correction, 89
practical points, 97
reflecting, 94
regulating iris of, 92
ring test, 89, 250
scale on, 93
sleeve, stop for, 154
slide thickness, 251
stop for dark field, 93
suggested, 87
summary, 96
testing, 87, 172
uncorrected, 81
aperture of, 83, 201
disadvantages of, 83
and ground glass, 252
illumination, 73
and large source, 248
and lens, 251
and small source, 91
superfluous, 204
under-correction, 89, 91
upper lens, 87
use of, 89
water-immersion, 87, 106
Conrady, circular source, 69
diatom test, 122
Conrady, dry objectives over 0.85 N.A., 128
large cones, 203, 212
in Spitta's book on the microscope, 210
Convergence of tubes, 37
Corning Glass Co., daylight glass, 76
Correction by drawtube, 142
Correction collar, for dry objective, 112
use of, 260
Cover-glass, care of, 178
cleaning, 178
disuse of, 112
measuring, 258
mounting on, 102
practical points, 114
problem, 2, 110
final solution, 115
summary, 113
proper thickness, finding, 259
remedies for wrong thickness, 111
thick, 63, 262
thickness, 110, 261
working without, 63
Czapski, book on optical instruments, 211
twin-objective binocular, 43

D

Dallinger, plane mirror, 137
reflecting prism, 138
revision of Carpenter on the microscope, 210
Dammar, for sealing, 177
Dark field, with achromatic condenser, 253
advantages of, 96
with bicentric condenser, 254
with cardioid condenser, 254
with Cassegrain condenser, 254
with center stop, 93
complementary colors in, 95
condensers, 93
for objects in balsam, 95
in water, 94
resolution of, 203
testing, 173
disadvantages of, 96

Dark field, with Leuchtbild condenser, 254
with water-immersion, 208
Darwin, simple magnifier, 197
Datura stramonium, quadrivalents, 224
Daylight glass, 76
Definition, losses in, 1
Dendrocoelum, chromosomes, 238
Denham, variable resistance, 78
Detto slide bar, 50, 139, 206
Diaphragm, drawtube, 262
pivoted, 154
source of light, 3
Diaphragms for twin objectives, 43
Diatoms, resolution of, 261
Diplopia, from unadjusted binocular, 24
Dippel, book on the microscope, 211
Discovery, methods of, 214
Dissection, magnifiers for, 105
under water, 105
Doublet, defined, 14
Drawing, with camera, 161
half-tone, 163
India-ink, 163
for lantern slides, 163
magnification of, 164
from photographs, 163
practical points, 164
reference letters, 163
for zinc etchings, 163
Drawtube, care of, 181
correction by, 142
diaphragm in, 143, 262
practical points, 145
rackwork on, 56, 143
routine work, 56
summary, 145
use of, 142
Drosophila, chromosomes, 238
mutants, 240
Dust in the microscope, 182

E

Eastman Kodak Co., Wratten films, 75
Ehringhaus, booklet on the microscope, 209
Embryo chick, 239
Enlargement, 101
Epidermis, origin of, 231
Errors, accumulation of, 1
in microscopy, 6, 190
in photography, 165
Eye, unoccupied, 15
with monocular, 55
Eyepiece, boundary of field, 150
caps, with glasses, 24, 25
care of, 182
changing, 57
circles, 30
magnifying, 263
and pupil, 31
compensating, 147
origin of, 200
use of, 148
constant, 151
changing, 149
diaphragm, 151
eyepoint of, 147
Huyghenian, 147, 150
kinds of, 147
low and high, 35
magnification, 120, 149
measuring, 151
optimum use of, 148
orthoscopic, 147
parfocal, 40, 150
periplane, etc., 147
photographic, 148
practical points, 152
projection, 166
pulling out, 113
summary, 152
testing, 172
Eyepoint, 30, 147, 150
Eyes, blind spots of, 50
floating fibers in, 50

F

Ferns, fertilization of, 232
Field of view, 18, 28
Filaria, smear, 239
Filters, yellow-green, transmission of, 78
Fine motion, care of, 182
use of, 2

Fluorite, objectives, 124
  in apochromatic objectives, 200
Focusing condensers, 32
  objectives, 33
Foraminifera, living, 240
Fritillaria lanceolata, chromomeres, 220
Fucus, antheridia, 231
  embryos, 232

G

Gage, book on the microscope, 209
  daylight glass, 204
  electric lamps, 73
Gage, for measuring covers, 111
Galileo, early microscope, 196
Galtonia candicans, chromomeres, 218
Gelei, mounting in immersion oil, 12
Genes, visibility of, 216
Glare and large source, 68, 247
Glass, daylight, 76
  for color filters, 75
  ground, care of, 175
    preparation of, 70
    source of light, 69
    testing, 70, 171, 247
    with uncorrected condenser, 252
  matt, 70
  opal, 70
Glossary, microscopical, 277
Grantia, living, 240
Greenough binocular (*see* Binocular, twin-objective)
  reflecting prisms, 43
Gullstrand, vision through microscope, 48

H

Hartnack, water-immersion objectives, 198
Hartridge, accessory lens, 11
  acuity of vision, 77
  bull's eye, 72
  compensating eyepieces, 148
  condenser, corrected, 11
    uncorrected, 84
Hartridge, frosted glass, 11
  ground glass, 68
    for uncorrected condenser, 85
  illumination, 66, 67
  lamp distance, 11
  matt glass below condenser, 73
  opal glass, 70
  papers on large cones, 212
  slide thickness, 11
  source diaphragm, 67
Hemerocallis fulva, chromosomes, 226
Heurck, van, amplifier, 143
High powers, manipulation, 194
Homal for photography, 143, 166
Hyacinthus orientalis, reduction division, 223
Hypotheses, use of, 214
Hyrax as mounting medium, 104

I

Illumination, methods of, 66
  practical points, 74
  summary, 73
Image, brightness of, 19
  defects in, 1
  injury to, causes of, 6
Image-field, 28
Immersion oil, brazilin in, 105
  care of, 179
  with condensers, 86
  mounting medium, 178
  objects in, 99
  with xylol, 104
India-ink drawings, 163
Iris, condenser, regulating, 92
  traversing and rotating, 205
Iron-acetocarmine preparations, 177, 242
Iron-brazilin stain, 243
Ives, monobjective binocular, 52, 202

J

Jena glass-works, colored glass, 77
  new glasses, 199

Jentzsch, monobjective binocular, 46, 52, 202
paper on dark field, 212

K

Kniphofia aloides, chromomeres, 221
Koch, oil-immersion objective, 199
uncorrected condenser, 82
wide cones, 82
Koehler, homal, 203
illumination, 67
paper on hand lens, 211

L

Lamp, C-Mazda, 62, 70, 73
care of, 175
distance and condenser, 251
kerosene, 67
Lee, Bolles, cedar oil as clearer, 242
fading in Canada balsam, 103
stains in cedar oil, 104
"Vademecum," 241
Leeuwenhoek, discoveries, 196
Leitz, condenser, achromatic, 160
oil-immersion, 201
immersion oil, 105
Lihotzky binocular attachment, 49
metallurgical objectives, 157
miniature binocular, 23
periplane eyepieces, 148
water-immersion objective, 119
Lens, accessory, for condenser, 85
achromatic, 15
anastigmatic, 18
aperture of, 18
aspheric, 15
brightness of image, 19
bull's-eye, 71
concave, as amplifier, 257
with condenser, uncorrected, 251
condensing, aspheric, 71
with ground glass, 70
corrected, 14
identifying, 15
correcting condenser, 90
doublet, 17
field of, 18
Lens, hand, care of, 184
holder, 16
paper, use of, 127
triplet, 18
using, 20
Leuchtbild condenser, 95
Light, adjusting intensity of, 78
bluish-green, 266
filters, 75, 206
care of, 175
practical points, 79
summary, 78
testing, 171
transmission of, 78
use of, 3
flooding with, 92
green, and aspheric condenser, 253
large cones of, 211
large source and glare, 247
moderating, 159
polarized, with diatoms, 262
with starch, 231
screens, use of, 3, 78, 265
source of, 28
ultra-violet, 207
yellow-green, advantages of, 76, 266
Lihotzky binocular attachment, 49, 52
Lilium longiflorum, nodes of bivalents, 222
Lilium pardalinum, chromomeres, 219
Lister, achromatic objective, 197
Literature of the microscope, references to, 292

M

Magnification, above the limit, 101
and aperture, 119
classification of, 27
eyepiece, 120, 149
modern method, 119
objective, 149, 152, 264
old and new, 120
useful, 26
limit of, 100
table, 120

Magnifier, aperture of, 19
  binocular, 22
    care of, 183
  brightness, 19
  doublet, 17
  practical points, 25
  with rhombohedral prisms, 22
  rules disregarded, 20, 22
    regarded, 20, 22
  simple, 196
  spectacle, 22
  summary, 24
  triplet, 18
  use, 14, 20, 162
Malaria, smear, 239
Mangifera indica, polyembryony, 230
Mann, water-immersion, 132
Measuring aperture of objective, 267
  chromosomes, 144
  eyepiece, 151
  magnifying power, 264
  methods of, 151
  microscopic objects, 264
Mees, booklet on color screens, 212
  Wratten filters, 203
Merlin, resolution with dark field, 203
  small cocci, 102
  submicroscopic objects, 100
Metz, condenser, achromatic oil-immersion, 201
  dark-field, 93
  paper on, 212
Metzner, book on the microscope, 210
  mounting in immersion oil, 12
Microscope, care of, 175
    practical points, 184
  discoveries with, 214
  exercises with, 247
  first use of, 196
  future discoveries, 217
  future of, 204
  high-power, 28
    apparatus for, 11
    rules, 186
    testing, 173
    working, 12
Microscope, illumination, 66
  inclinable, 58
  inclination of, 183
  labor-saving, 154
  literature, 209
  low-power, 27, 37
  medium-power, 27
  mishaps with, 192
  monocular, 55
    advantages of, 55
    distance spectacles for, 59
    summary, 58
  outfits, 154
    improving, 159
    suggested, 157
    summary, 160
  past and future of, 196
  practical points, 36
  references to literature of, 292
  routine, 60, 62
    dry condenser for, 62
    lamp for, 62
    low eyepieces, 60
    objectives for, 60
    summary, 64
  screwed down, 58, 183
  structure of, 28
  suggested medium power, 207
  summary, 35
  superfluities, 204
  testing, 171
  for uncovered objects, 157
  use of, 26
  utilitarian discoveries, 217
Microscopical glossary, 277
  image, injuries to, 6
  objects, 99, 218
  preparations, 104
  Society, Journal of the Royal, 209
  study, sequence of, 1
  training, summary, 12
Microscopy, first rule, 28
  fourth rule, 35
  high-power, rules for, 11
  routine, rules, 189
  second rule, 30
  third rule, 32
Mikroskopie, Zeitschrift fuer wissenschaftliche, 209

Mirror, centering, 138
  concave, 31, 137
    aperture of, 137
    when superfluous, 204
  divided, 41
  pivots of, 138
  plane, 31, 137
    care of, 176
  practical points, 145
  summary, 144
Moeller, test slide, 43
Monobromide of naphthalin, 104
Monocular, practical points, 58
  yellow-green filters for, 75
Mounting media, 101, 102
  care of, 177
Mus, chromosomes of, 237
Muscae volitantes, 50
Muscle fiber, living, 240

N

Nelson, achromatic condenser, 11
  Cassegrain condenser, 202
  correction of condensers, 86
  diaphragm in drawtube, 56, 143
  double prism, 41
  four-fifths cone, 92
  illumination, 67
  large cones, 203
    papers on, 211
  rackwork on drawtube, 56
  resolution with dark field, 203
Nelson's method, improvements in, 68
Nitella, antheridia, 231
Nosepiece, revolving, 139
    care of, 181
    centering objectives on, 140
    practical points, 145
    summary, 145
    testing, 174, 268
Numerical aperture (*see* aperture)

O

Object-field, 28
Object, in balsam, 99
  classification of, 105
Object, distance from front focal plane, 116
  for dry objectives, 107
  in immersion oil, 99
  for low-power Greenough, 105
  microscopic, fixing and staining, 241
  for oil-immersion objectives, 108
  practical points, 109
  for spectacle magnifiers, 105
  for twin-objective binocular, 105
  submicroscopic, 101
  summary, 108
  uncovered, 263
    objectives for, 265
  for water-immersion objectives, 107
  in watery media, 99
Objective changers, 126, 141
  circle, 29
  40, 118
  120, for photography, 124
  10, 117
  20, for dark field, 93
Objectives, 116
  achromatic, 156
    and apochromatic, 125
    origin, 197
  adjusting, 121
  apochromatic, 156
    origin, 199
  back of, 182
  capability of, 61
  care of, 127, 180
  centering, 126, 140
  choice of, 122
  cleaning, 180
  in dessicator, 127, 181
  dry, 33, 111, 259, 267
  focal lengths, 117
  focusing, 33
  fluorite, 124
  formed of rings, 203
  high dry, 158
    with wrong covers, 110
  histological, 203
  low oil-immersion, 118
  magnification, 149

Objectives, marking, 128
measuring aperture, 267
magnification, 152, 264
metallurgical, 157
monobromide of naphthalin, 104, 202, 207
use of, 266
monochromatic, 202
oil-immersion, 34
correcting, 113
origin, 199
of optimum quality, 262
overcorrection of, 121
parfocal, 40, 140
practical points, 129
structure of, 116
suggested monochromatic, 206
photographic, 206
summary, 128
testing, 155, 172
tests for correction, 122
for uncovered objects, 265
with uncovered objects, 263
undercorrection of, 121
used without cover-glasses, 33
water and oil-immersion compared, 268
water-immersion, 3, 34, 131
advantages of, 131
correction collar, 132
history, 198
kinds of, 132
practical points, 135
precautions with, 133
summary, 134
test object for, 134
Oenothera, chromosomes, 227
Oil, immersion, appropriate, 260
objects in, 255
Optical rules disregarded with microscope, 4, 5
regarded, with microscope, 4, 5
Orthomorphy, 43
Outfits, microscope, 154
Over-correction of condenser, 89
of objective, 121

P

Pachytene, chromomeres at, 219
Paraffin oil, as mounting medium, 103
useless for immersion, 103
Paramœcium, in cultures, 240
Petri dish, plate-glass cover for, 106
Phagocytosis, 240
Phoku camera, 143, 166
care of, 183
testing, 173
Photographic prints, over-developed, 167
Photographs, enlarging, 167
Photography, 165
apparatus, 170
with camera lens over eyepiece, 166
errors in, 165
exposure, 167
future of, 207
objective **120** for, 124
optimum methods, 166
practical points, 170
practice in, 168
with short waves, 168
stains for, 167
ultra-violet, 168
Wratten book on, 77
Polar granules, 221
Pollen-grains, nuclei, 228
Preparations, microscopical, 104
care of, 178
Prism, double, 41
reflecting, 33, 137
care of, 176
for total reflection, 248
Prisms, Greenough reflecting, 43
Porro, 23
rhombohedral, 22

Q

Questions, 269

R

Rackwork, care of, 181
Realgar as mounting medium, 104

Refractive indices, 101
  table of, 102
Research, methods of, 214
Resolution, of dark-field condensers, 203
  of diatoms, 261
  limit of, 100
  losses in, 1
  with marginal rays, 248
Rhoeo discolor, chromosomes, 227
Ring test, 89, 250
Rohr, von, binoculars, 213
  monochromatic objective, 202
  orthomorphy, 43
Ross, correction collar, 198
Routine microscope, practical points, 64
  work, choosing objectives for, 125

S

Schmidt, cover-glass problem, 112
  water-immersion, 131
Screen before eyepieces, 54, 56
Screens, color, 75
    practical points, 79
  green, for aspheric condenser, 85
  for intensity of light, 78
  neutral, 78
Sea urchin, larva, 240
Secale, fracture of chromosome, 228
Sections, paraffin, method, 241
Semisterility in crosses, 230
Separation, limits of, 120
Siedentopf, binocular attachment, 52, 143, 203
  papers on dark field, 212
  photographic attachment, 143, 166, 203
  resolution with dark field, 203
  star test, 122
  test for objective, 172
  ultramicroscope, 132
Sine law, 80, 86
Slide bar, 206
  Detto, 50, 206
Slides, care of, 177
  reflections in, 68
  thickness, 251
Source of light, 28
  diaphragm on, 3, 208
  ground glass, 69
  large, and glare, 247
  original, 67
Source-field, 28
  and source, 68
Spectacle magnifiers, 22
Spectacles, distance, with binocular, 45
    with monocular, 59
    with parallel tubes, 51, 54
  with magnifiers, 25
  reading, and distance, 25
    with binocular, 45
    with converging tubes, 54
Spencer Lens Co., Abbe camera with half-silvered cube, 162
  achromatic condenser, 201
  booklet of instructions, 209
  eyepieces, 148
  Greenough binocular, 190
  half-silvered cube, in camera, 208
    in vertical illuminator, 208
  water-immersion objective, 119
Spirochætes, observed alive, 232
Spitta, book on microscope, 210
  front lens of immersion objectives, 180
  green filters, 11
  illumination, 67
  semi-apochromatic, 200
  Wratten filters, 203
Stage, 138
  mechanical, care of, 180
  practical points, 145
  summary, 144
Stain, iron-acetocarmine, 242
  iron-brazilin, 243
  iron-hæmatoxylin, 246
Staphylococcus, dark field, 234
Star test, for objectives, 111, 172, 173, 257
Starfish, larva, 240
Steinheil triplets, 18
Stizolobium, semisterile hybrid, 230
Streptococcus, dark field, 234
Styrax as mounting medium, 104

Submicroscopic objects, 100, 101
Substage, large centering, 204
Surirella gemma, in agar, 234
in air, 234
in hyrax, 235
test for water-immersion objective, 134
Swan cube, 23, 202

T

Test, focal, for condenser, 249
object, centering with, 126
plate, Abbe, 112, 260
ring, for condenser, 89, 250
slide, Moeller, 43
star, 173, 257
for water-immersion objective, 134
Testing, microscope, 171
nosepiece, 268
Tests for correction of objective, 122
Tissue cultures, 240
Tomopteris, chromosomes, 238
Tradescantia virginiana, chromosomes, 229
Triplet, defined, 14
Triticum, chromosomes, 229
Trypanosomes, smear, 239
Tube length, adjusting, 258
for oil-immersion objective, 113
changing, 111
increasing in binocular, 113
of monobjective binocular, 49, 51
Tulipa, nodes of bivalent chromosomes, 223
Tumors, chromosomes of, 238

U

Ultra-violet photography, 168
Under-correction of condenser, 89, 91
of objective, 121
Uvularia, reduction divisions, 223
segmented chromosomes, 219

V

Vertical illuminator, with semisilvered cube, 265
Vessels and fibers, separated, 231
Vorticella, water-immersion objective, 240

W

Water, mounting in, 102
objects in, 255
Water-immersion, objective, 131
future of, 207
precautions, 133
Watson and Sons, achromatic condenser, 201
booklet of instructions, 209
compensating eyepieces, 148
dry achromatic condenser, 160
holoscopic condenser, 176
rotation of nosepiece, 141, 181
Watson's Microscope Record, 73, 213
Wenham, correction collar, 198
Wilson, the 120 objective, 118
Wollaston, doublet, 197
Wratten book on photography, 77
films, 75
light filters, 78, 212
neutral screens, 78
screens with aspheric condenser, 85

X

Xylol, for condenser, 154, 177

Y

Yeast, nuclei, 235
Yellow-green light filters, 75

Z

Zeiss, booklet of instructions, 209
centered condenser sleeve, 139
centering ring, 126, 140, 158
for condensers, 205
condenser, achromatic oil-immersion, 201
diaphragms for twin objectives, 43
doublets and triplets, 197

Zeiss, dry achromatic condenser, 160
early objectives, 199
excentric collar, 81
fine motion, 133
Greenough binocular, 190
Greenough reflecting prisms, 43
ground glass, 70
for uncorrected condenser, 85
high dry objectives with concave front, 128
homals, 149
Leuchtbild condenser, 202
matt glass below condenser, 73
metallurgical objectives, 157
monobjective binocular, 46, 47, 48
monobromide of naphthalin objective, 104
Zeiss, movement of mechanical stage, 139
nosepiece, 141, 181
objective changers, 126, 141
objective lenses in rings, 203
orthoscopic eyepieces, 148
Phoku camera, 166
prisms of binocular, 22
projection eyepieces, 149
sleeve with tightener, 81
spectacle magnifiers, 22
twin-objective binocular, origin, 201
water-immersion objectives, 119, 132
Zinc etching, drawing for, 163
Zsigmondy, ultramicroscope, 132